- **Wide Operating Voltage Range of 2 V to 6 V**
- **High-Current 3-State Outputs Can Drive Up To 15 LSTTL Loads**
- **Low Power Consumption, 80-μA Max I_{CC}**
- **Typical t_{pd} = 11 ns**
- **±6-mA Output Drive at 5 V**
- **Low Input Current of 1 μA Max**
- **Independent Registers for A and B Buses**
- **Multiplexed Real-Time and Stored Data**
- **True Data Paths**

SN54HC646 . . . JT OR W PACKAGE
SN74HC646 . . . DW OR NT PACKAGE
(TOP VIEW)

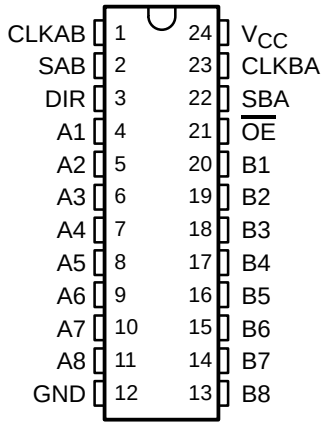

SN54HC646 . . . FK PACKAGE
(TOP VIEW)

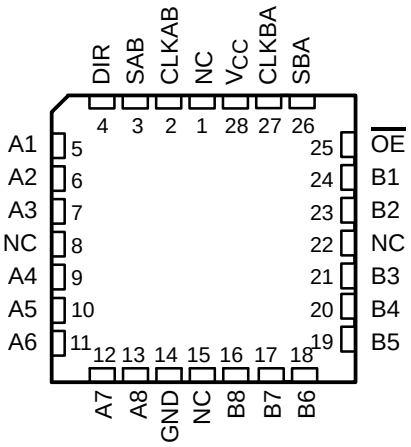

NC – No internal connection

description/ordering information

The ’HC646 devices consist of bus-transceiver circuits with 3-state outputs, D-type flip-flops, and control circuitry arranged for multiplexed transmission of data directly from the input bus or from the internal registers. Data on the A or B bus is clocked into the registers on the low-to-high transition of the appropriate clock (CLKAB or CLKBA) input. Figure 1 illustrates the four fundamental bus-management functions that can be performed with the ’HC646 devices.

Output-enable ($\overline{OE}$) and direction-control (DIR) inputs control the transceiver functions. In the transceiver mode, data present at the high-impedance port may be stored in either or both registers.

The select-control (SAB and SBA) inputs can multiplex stored and real-time (transparent mode) data. DIR determines which bus receives data when $\overline{OE}$ is active (low). In the isolation mode ($\overline{OE}$ high), A data may be stored in one register and/or B data may be stored in the other register.

ORDERING INFORMATION

T_A	PACKAGE†		ORDERABLE PART NUMBER	TOP-SIDE MARKING
–40°C to 85°C	PDIP – NT	Tube	SN74HC646NT	SN74HC646NT
	SOIC – DW	Tube	SN74HC646DW	HC646
		Tape and reel	SN74HC646DWR	
–55°C to 125°C	CDIP – JT	Tube	SNJ54HC646JT	SNJ54HC646JT
	CFP – W	Tube	SNJ54HC646W	SNJ54HC646W
	LCCC – FK	Tube	SNJ54HC646FK	SNJ54HC646FK

† Package drawings, standard packing quantities, thermal data, symbolization, and PCB design guidelines are available at www.ti.com/sc/package.



Please be aware that an important notice concerning availability, standard warranty, and use in critical applications of Texas Instruments semiconductor products and disclaimers thereto appears at the end of this data sheet.

UNLESS OTHERWISE NOTED this document contains PRODUCTION DATA information current as of publication date. Products conform to specifications per the terms of Texas Instruments standard warranty. Production processing does not necessarily include testing of all parameters.

Copyright © 2003, Texas Instruments Incorporated

description/ordering information (continued)

To ensure the high-impedance state during power up or power down, $\overline{OE}$ should be tied to V_{CC} through a pullup resistor; the minimum value of the resistor is determined by the current-sinking capability of the driver.

When an output function is disabled, the input function is still enabled and can be used to store data. Only one of the two buses, A or B, may be driven at a time.

FUNCTION TABLE

INPUTS						DATA I/O		OPERATION OR FUNCTION
$\overline{OE}$	DIR	CLKAB	CLKBA	SAB	SBA	A1–A8	B1–B8	
X	X	↑	X	X	X	Input	Unspecified†	Store A, B unspecified†
X	X	X	↑	X	X	Unspecified†	Input	Store B, A unspecified†
H	X	↑	↑	X	X	Input	Input	Store A and B data
H	X	H or L	H or L	X	X	Input disabled	Input disabled	Isolation, hold storage
L	L	X	X	X	L	Output	Input	Real-time B data to A bus
L	L	X	H or L	X	H	Output	Input	Stored B data to A bus
L	H	X	X	L	X	Input	Output	Real-time A data to B bus
L	H	H or L	X	H	X	Input	Output	Stored A data to B bus

† The data-output functions can be enabled or disabled by various signals at $\overline{OE}$ and DIR. Data-input functions always are enabled; i.e., data at the bus terminals is stored on every low-to-high transition of the clock inputs.

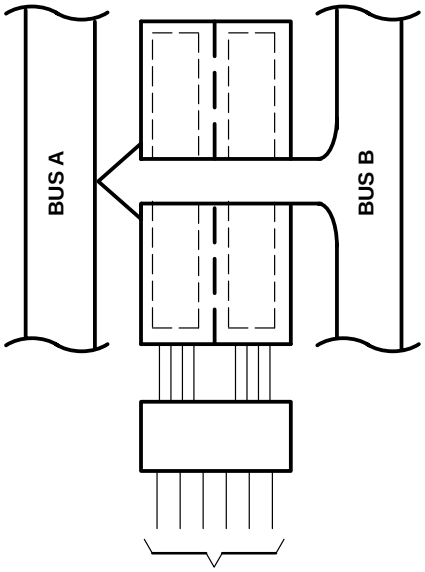

21 $\overline{OE}$	3 DIR	1 CLKAB	23 CLKBA	2 SAB	22 SBA
L	L	X	X	X	L

REAL-TIME TRANSFER
BUS B TO BUS A

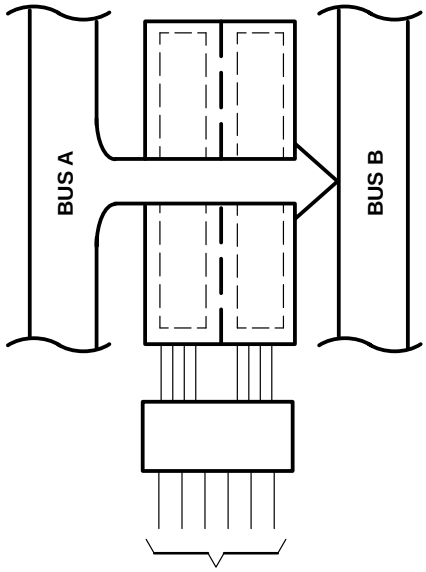

21 $\overline{OE}$	3 DIR	1 CLKAB	23 CLKBA	2 SAB	22 SBA
L	H	X	X	L	X

REAL-TIME TRANSFER
BUS A TO BUS B

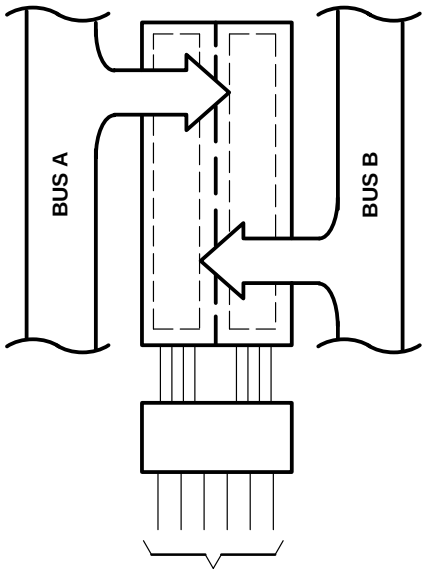

21 $\overline{OE}$	3 DIR	1 CLKAB	23 CLKBA	2 SAB	22 SBA
X	X	↑	X	X	X
X	X	X	↑	X	X
H	X	↑	↑	X	X

STORAGE FROM
A, B, OR A AND B

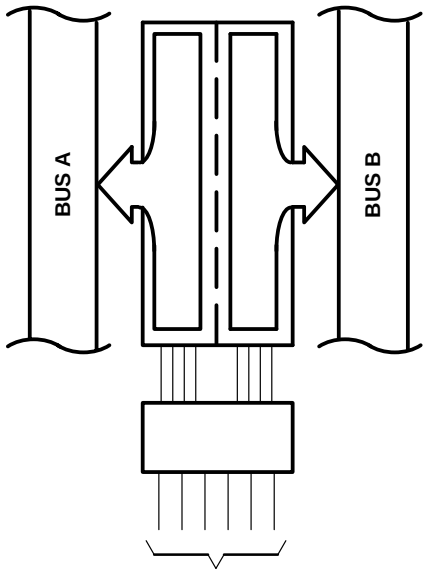

21 $\overline{OE}$	3 DIR	1 CLKAB	23 CLKBA	2 SAB	22 SBA
L	L	X	H or L	X	H
L	H	H or L	X	H	X

TRANSFER STORED DATA
TO A AND/OR B

Pin numbers shown are for the DW, JT, NT, and W packages.

Figure 1. Bus-Management Functions

logic diagram (positive logic)

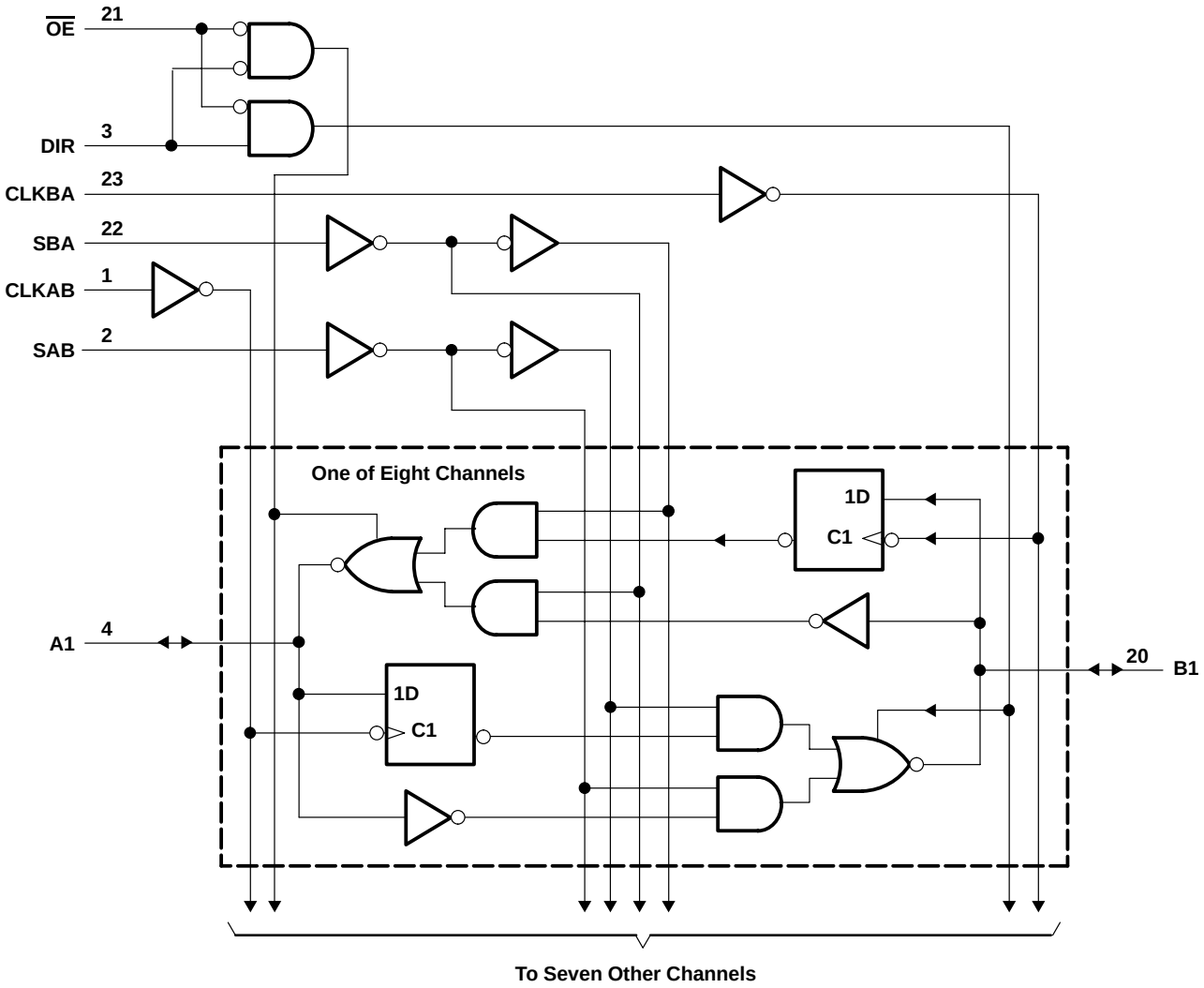

Pin numbers shown are for the DW, JT, NT, and W packages.

absolute maximum ratings over operating free-air temperature range (unless otherwise noted)†

Supply voltage range, V_{CC}	–0.5 V to 7 V
Input clamp current, I_{IK} ($V_I < 0$ or $V_I > V_{CC}$) (see Note 1)	±20 mA
Output clamp current, I_{OK} ($V_O < 0$ or $V_O > V_{CC}$) (see Note 1)	±20 mA
Continuous output current, I_O ($V_O = 0$ to V_{CC})	±35 mA
Continuous current through V_{CC} or GND	±70 mA
Package thermal impedance, θ_{JA} (see Note 2): DW package	46°C/W
(see Note 3): NT package	67°C/W
Storage temperature range, T_{stg}	–65°C to 150°C

† Stresses beyond those listed under “absolute maximum ratings” may cause permanent damage to the device. These are stress ratings only, and functional operation of the device at these or any other conditions beyond those indicated under “recommended operating conditions” is not implied. Exposure to absolute-maximum-rated conditions for extended periods may affect device reliability.

NOTES: 1. The input and output voltage ratings may be exceeded if the input and output current ratings are observed.
2. The package thermal impedance is calculated in accordance with JESD 51-7.
3. The package thermal impedance is calculated in accordance with JESD 51-3.

recommended operating conditions (see Note 4)

			SN54HC646			SN74HC646			UNIT
			MIN	NOM	MAX	MIN	NOM	MAX	
V_{CC}	Supply voltage		2	5	6	2	5	6	V
V_{IH}	High-level input voltage	V_{CC} = 2 V	1.5			1.5			V
		V_{CC} = 4.5 V	3.15			3.15			
		V_{CC} = 6 V	4.2			4.2			
V_{IL}	Low-level input voltage	V_{CC} = 2 V			0.5			0.5	V
		V_{CC} = 4.5 V			1.35			1.35	
		V_{CC} = 6 V			1.8			1.8	
V_I	Input voltage		0		V_{CC}	0		V_{CC}	V
V_O	Output voltage		0		V_{CC}	0		V_{CC}	V
t_t	Input transition (rise and fall) time	V_{CC} = 2 V			1000			1000	ns
		V_{CC} = 4.5 V			500			500	
		V_{CC} = 6 V			400			400	
T_A	Operating free-air temperature		–55		125	–40		85	°C

PRODUCT PREVIEW

NOTE 4: All unused inputs of the device must be held at V_{CC} or GND to ensure proper device operation. Refer to the TI application report, *Implications of Slow or Floating CMOS Inputs*, literature number SCBA004.

electrical characteristics over recommended operating free-air temperature range (unless otherwise noted)

PARAMETER		TEST CONDITIONS		V_{CC}	T_A = 25°C			SN54HC646		SN74HC646		UNIT
					MIN	TYP	MAX	MIN	MAX	MIN	MAX	
V_{OH}		V_I = V_{IH} or V_{IL}	I_{OH} = –20 μA	2 V	1.9	1.998		1.9		1.9		V
				4.5 V	4.4	4.499		4.4		4.4		
				6 V	5.9	5.999		5.9		5.9		
			I_{OH} = –6 mA	4.5 V	3.98	4.3		3.7		3.84		
			I_{OH} = –7.8 mA	6 V	5.48	5.8		5.2		5.34		
V_{OL}		V_I = V_{IH} or V_{IL}	I_{OL} = 20 μA	2 V		0.002	0.1		0.1		0.1	V
				4.5 V		0.001	0.1		0.1		0.1	
				6 V		0.001	0.1		0.1		0.1	
			I_{OL} = 6 mA	4.5 V		0.17	0.26		0.4		0.33	
			I_{OL} = 7.8 mA	6 V		0.15	0.26		0.4		0.33	
I_I	Control inputs	V_I = V_{CC} or 0		6 V			±0.1	±100		±1000		±1000	nA
I_{OZ}	A or B	V_O = V_{CC} or 0		6 V			±0.01	±0.5		±10		±5	μA
I_{CC}		V_I = V_{CC} or 0,	I_O = 0	6 V			8		160		80	μA
C_i	Control inputs			2 V to 6 V		3	10		10		10	pF

PRODUCT PREVIEW

PRODUCT PREVIEW information concerns products in the formative or design phase of development. Characteristic data and other specifications are design goals. Texas Instruments reserves the right to change or discontinue these products without notice.

timing requirements over recommended operating free-air temperature range (unless otherwise noted)

		V_{CC}	T_A = 25°C		SN54HC646		SN74HC646		UNIT
			MIN	MAX	MIN	MAX	MIN	MAX	
f_{clock}	Clock frequency	2 V		6		4.3		5.5	MHz
		4.5 V		31		22		27	
		6 V		36		25		31	
t_w	Pulse duration, CLKBA or CLKAB high or low	2 V	80		115		95		ns
		4.5 V	16		23		19		
		6 V	14		20		16		
t_{su}	Setup time, A before CLKAB↑ or B before CLKBA↑	2 V	100		150		125		ns
		4.5 V	20		30		25		
		6 V	17		26		21		
t_h	Hold time, A after CLKAB↑ or B after CLKBA↑	2 V	5		5		5		ns
		4.5 V	5		5		5		
		6 V	5		5		5		

PRODUCT PREVIEW

PRODUCT PREVIEW information concerns products in the formative or design phase of development. Characteristic data and other specifications are design goals. Texas Instruments reserves the right to change or discontinue these products without notice.

switching characteristics over recommended operating free-air temperature range, C_L = 50 pF (unless otherwise noted) (see Figure 2)

PARAMETER	FROM (INPUT)	TO (OUTPUT)	V_{CC}	T_A = 25°C			SN54HC646		SN74HC646		UNIT
				MIN	TYP	MAX	MIN	MAX	MIN	MAX	
f_{max}			2 V	6	11		4.4		5.5		MHz
			4.5 V	31	54		22		27		
			6 V	36	64		25		31		
t_{pd}	CLKBA or CLKAB	A or B	2 V		65	180		270		225	ns
			4.5 V		18	36		54		45	
			6 V		14	31		46		38	
	A or B	B or A	2 V		50	135		205		170	
			4.5 V		14	27		41		34	
			6 V		11	23		35		29	
	SBA or SAB†	A or B	2 V		70	190		285		240	
			4.5 V		20	38		57		48	
			6 V		16	32		48		41	
t_{en}	$\overline{OE}$	A or B	2 V		85	245		370		305	ns
			4.5 V		25	49		74		61	
			6 V		20	42		63		52	
t_{dis}	$\overline{OE}$	A or B	2 V		85	245		370		305	ns
			4.5 V		25	49		74		61	
			6 V		20	42		63		52	
t_{en}	DIR	A or B	2 V		80	245		370		305	ns
			4.5 V		25	49		74		61	
			6 V		20	42		63		52	
t_{dis}	DIR	A or B	2 V		80	245		370		305	ns
			4.5 V		25	49		74		61	
			6 V		20	42		63		52	
t_t		Any	2 V		28	60		90		75	ns
			4.5 V		8	12		18		15	
			6 V		6	10		15		13	

† These parameters are measured with the internal output state of the storage register opposite that of the bus input.

PRODUCT PREVIEW

PRODUCT PREVIEW information concerns products in the formative or design phase of development. Characteristic data and other specifications are design goals. Texas Instruments reserves the right to change or discontinue these products without notice.

switching characteristics over recommended operating free-air temperature range, C_L = 150 pF (unless otherwise noted) (see Figure 2)

PARAMETER	FROM (INPUT)	TO (OUTPUT)	V_{CC}	T_A = 25°C			SN54HC646		SN74HC646		UNIT
				MIN	TYP	MAX	MIN	MAX	MIN	MAX	
t_{pd}	CLKBA or CLKAB	A or B	2 V		90	265		400		330	ns
			4.5 V		24	53		80		66	
			6 V		20	46		68		57	
	A or B	B or A	2 V		70	220		335		280	
			4.5 V		20	44		67		56	
			6 V		15	38		57		49	
	SBA or SAB†	A or B	2 V		80	275		415		345	
			4.5 V		24	55		83		69	
			6 V		20	47		70		60	
t_{en}	$\overline{OE}$	A or B	2 V		113	330		500		410	ns
			4.5 V		33	66		100		82	
			6 V		27	57		85		71	
	DIR	A or B	2 V		113	330		500		410	
			4.5 V		33	66		100		82	
			6 V		27	57		85		71	
t_t		Any	2 V		45	210		315		265	ns
			4.5 V		17	42		63		53	
			6 V		13	36		53		43	

† These parameters are measured with the internal output state of the storage register opposite that of the bus input.

PRODUCT PREVIEW

operating characteristics, T_A = 25°C

PARAMETER		TEST CONDITIONS	TYP	UNIT
C_{pd}	Power dissipation capacitance	No load	50	pF

PRODUCT PREVIEW information concerns products in the formative or design phase of development. Characteristic data and other specifications are design goals. Texas Instruments reserves the right to change or discontinue these products without notice.

PARAMETER MEASUREMENT INFORMATION

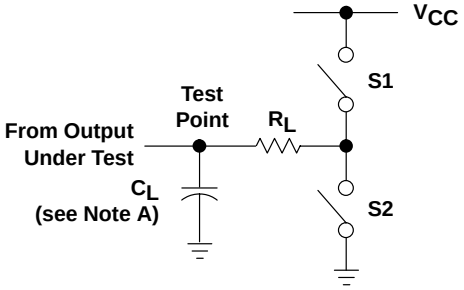

LOAD CIRCUIT

PARAMETER		R_L	C_L	S1	S2
t_{en}	t_{PZH}	1 kΩ	50 pF or 150 pF	Open	Closed
	t_{PZL}			Closed	Open
t_{dis}	t_{PHZ}	1 kΩ	50 pF	Open	Closed
	t_{PLZ}			Closed	Open
t_{pd} or t_t		––	50 pF or 150 pF	Open	Open

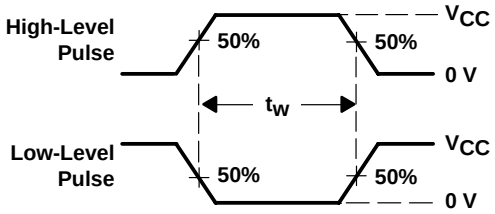

VOLTAGE WAVEFORMS
PULSE DURATIONS

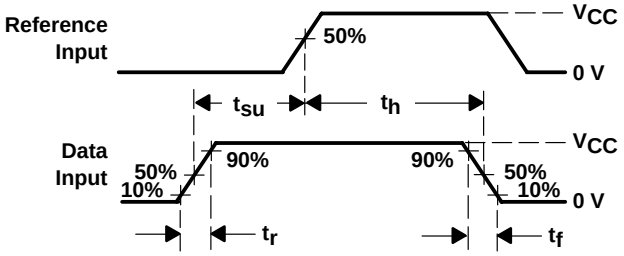

VOLTAGE WAVEFORMS
SETUP AND HOLD AND INPUT RISE AND FALL TIMES

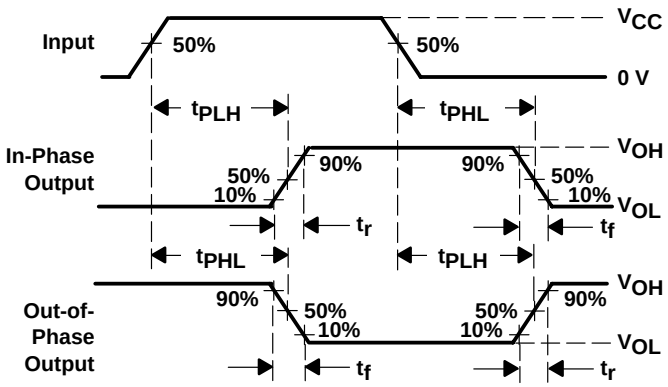

VOLTAGE WAVEFORMS
PROPAGATION DELAY AND OUTPUT TRANSITION TIMES

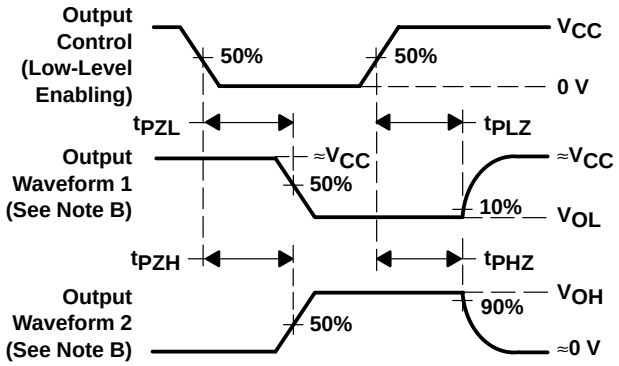

VOLTAGE WAVEFORMS
ENABLE AND DISABLE TIMES FOR 3-STATE OUTPUTS

NOTES: A. C_L includes probe and test-fixture capacitance.
B. Waveform 1 is for an output with internal conditions such that the output is low except when disabled by the output control. Waveform 2 is for an output with internal conditions such that the output is high except when disabled by the output control.
C. Phase relationships between waveforms were chosen arbitrarily. All input pulses are supplied by generators having the following characteristics: PRR ≤ 1 MHz, Z_O = 50 Ω, t_r = 6 ns, t_f = 6 ns.
D. For clock inputs, f_{max} is measured when the input duty cycle is 50%.
E. The outputs are measured one at a time with one input transition per measurement.
F. t_{PLZ} and t_{PHZ} are the same as t_{dis}.
G. t_{PZL} and t_{PZH} are the same as t_{en}.
H. t_{PLH} and t_{PHL} are the same as t_{pd}.

Figure 2. Load Circuit and Voltage Waveforms

PACKAGING INFORMATION

Orderable Device	Status (1)	Package Type	Package Drawing	Pins	Package Qty	Eco Plan (2)	Lead/Ball Finish (6)	MSL Peak Temp (3)	Op Temp (°C)	Device Marking (4/5)	Samples
SN74HC646DW	ACTIVE	SOIC	DW	24	25	Green (RoHS & no Sb/Br)	CU NIPDAU	Level-1-260C-UNLIM	-40 to 85	HC646	Samples
SN74HC646DWG4	ACTIVE	SOIC	DW	24	25	Green (RoHS & no Sb/Br)	CU NIPDAU	Level-1-260C-UNLIM	-40 to 85	HC646	Samples
SN74HC646DWR	ACTIVE	SOIC	DW	24	2000	Green (RoHS & no Sb/Br)	CU NIPDAU	Level-1-260C-UNLIM	-40 to 85	HC646	Samples
SN74HC646NT	ACTIVE	PDIP	NT	24	15	Pb-Free (RoHS)	CU NIPDAU	N / A for Pkg Type	-40 to 85	SN74HC646NT	Samples
SN74HC646NT3	OBSOLETE	PDIP	NT	24		TBD	Call TI	Call TI	-40 to 85		
SN74HC646NTE4	ACTIVE	PDIP	NT	24	15	Pb-Free (RoHS)	CU NIPDAU	N / A for Pkg Type	-40 to 85	SN74HC646NT	Samples

(1) The marketing status values are defined as follows:
ACTIVE: Product device recommended for new designs.
LIFEBUY: TI has announced that the device will be discontinued, and a lifetime-buy period is in effect.
NRND: Not recommended for new designs. Device is in production to support existing customers, but TI does not recommend using this part in a new design.
PREVIEW: Device has been announced but is not in production. Samples may or may not be available.
OBSOLETE: TI has discontinued the production of the device.

(2) Eco Plan - The planned eco-friendly classification: Pb-Free (RoHS), Pb-Free (RoHS Exempt), or Green (RoHS & no Sb/Br) - please check http://www.ti.com/productcontent for the latest availability information and additional product content details.
TBD: The Pb-Free/Green conversion plan has not been defined.
Pb-Free (RoHS): TI's terms "Lead-Free" or "Pb-Free" mean semiconductor products that are compatible with the current RoHS requirements for all 6 substances, including the requirement that lead not exceed 0.1% by weight in homogeneous materials. Where designed to be soldered at high temperatures, TI Pb-Free products are suitable for use in specified lead-free processes.
Pb-Free (RoHS Exempt): This component has a RoHS exemption for either 1) lead-based flip-chip solder bumps used between the die and package, or 2) lead-based die adhesive used between the die and leadframe. The component is otherwise considered Pb-Free (RoHS compatible) as defined above.
Green (RoHS & no Sb/Br): TI defines "Green" to mean Pb-Free (RoHS compatible), and free of Bromine (Br) and Antimony (Sb) based flame retardants (Br or Sb do not exceed 0.1% by weight in homogeneous material)

(3) MSL, Peak Temp. - The Moisture Sensitivity Level rating according to the JEDEC industry standard classifications, and peak solder temperature.

(4) There may be additional marking, which relates to the logo, the lot trace code information, or the environmental category on the device.

(5) Multiple Device Markings will be inside parentheses. Only one Device Marking contained in parentheses and separated by a "~" will appear on a device. If a line is indented then it is a continuation of the previous line and the two combined represent the entire Device Marking for that device.

(6) Lead/Ball Finish - Orderable Devices may have multiple material finish options. Finish options are separated by a vertical ruled line. Lead/Ball Finish values may wrap to two lines if the finish value exceeds the maximum column width.

Important Information and Disclaimer: The information provided on this page represents TI's knowledge and belief as of the date that it is provided. TI bases its knowledge and belief on information provided by third parties, and makes no representation or warranty as to the accuracy of such information. Efforts are underway to better integrate information from third parties. TI has taken and continues to take reasonable steps to provide representative and accurate information but may not have conducted destructive testing or chemical analysis on incoming materials and chemicals. TI and TI suppliers consider certain information to be proprietary, and thus CAS numbers and other limited information may not be available for release.

In no event shall TI's liability arising out of such information exceed the total purchase price of the TI part(s) at issue in this document sold by TI to Customer on an annual basis.

TAPE AND REEL INFORMATION

REEL DIMENSIONS

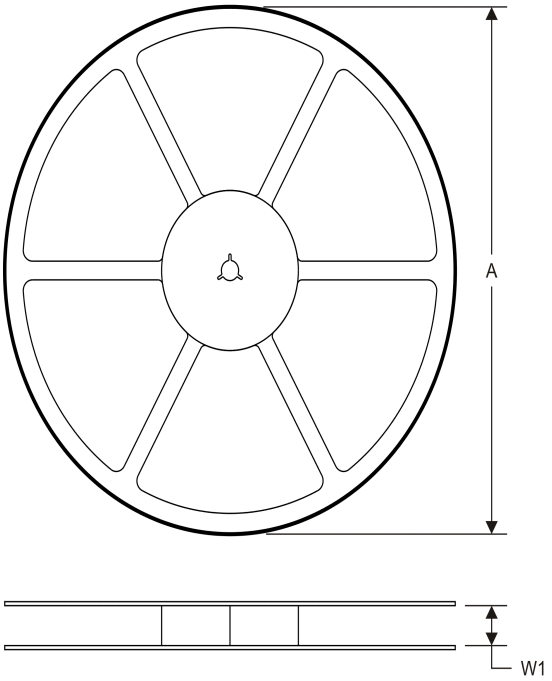

TAPE DIMENSIONS

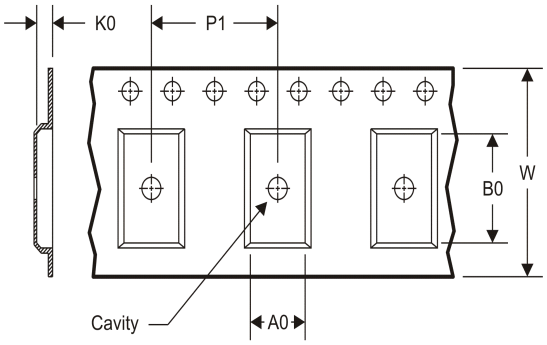

A0	Dimension designed to accommodate the component width
B0	Dimension designed to accommodate the component length
K0	Dimension designed to accommodate the component thickness
W	Overall width of the carrier tape
P1	Pitch between successive cavity centers

TAPE AND REEL INFORMATION

*All dimensions are nominal

Device	Package Type	Package Drawing	Pins	SPQ	Reel Diameter (mm)	Reel Width W1 (mm)	A0 (mm)	B0 (mm)	K0 (mm)	P1 (mm)	W (mm)	Pin1 Quadrant
SN74HC646DWR	SOIC	DW	24	2000	330.0	24.4	10.75	15.7	2.7	12.0	24.0	Q1

TAPE AND REEL BOX DIMENSIONS

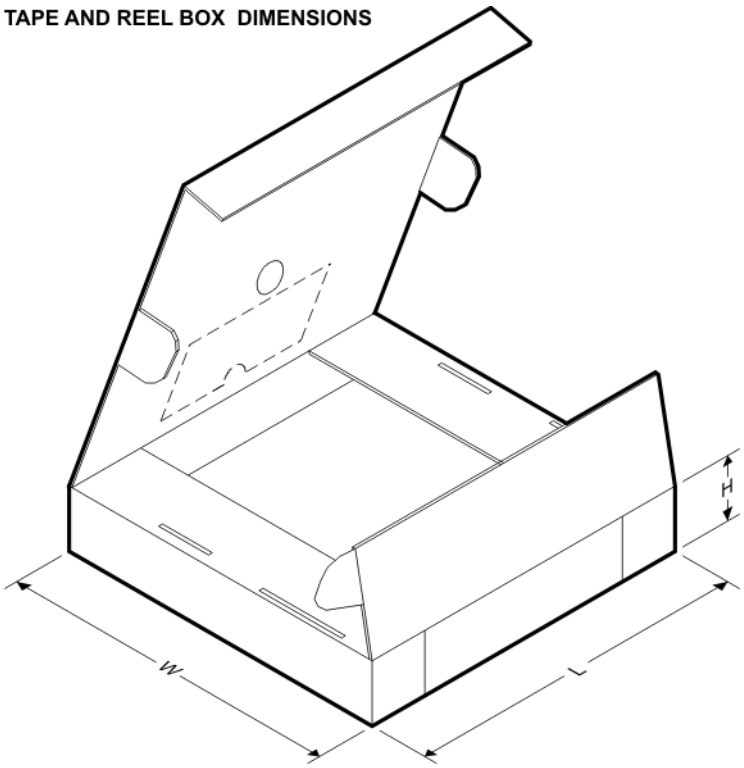

*All dimensions are nominal

Device	Package Type	Package Drawing	Pins	SPQ	Length (mm)	Width (mm)	Height (mm)
SN74HC646DWR	SOIC	DW	24	2000	367.0	367.0	45.0

NT (R–PDIP–T**) PLASTIC DUAL–IN–LINE PACKAGE

24 PINS SHOWN

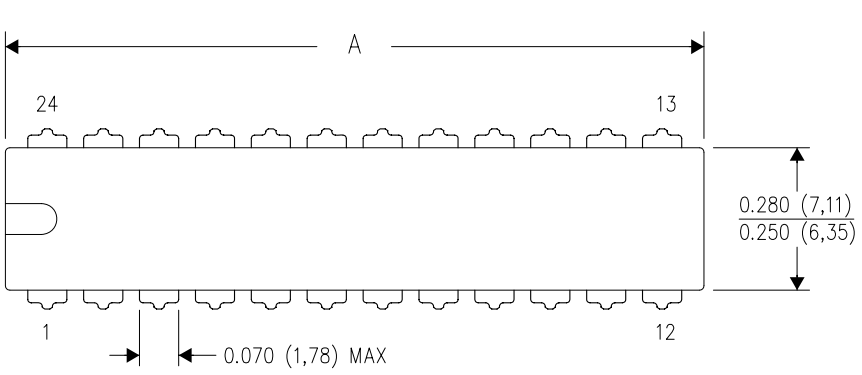

DIM \ PINS **	24	28
A MAX	1.260 (32,04)	1.425 (36,20)
A MIN	1.230 (31,24)	1.385 (35,18)
B MAX	0.310 (7,87)	0.315 (8,00)
B MIN	0.290 (7,37)	0.295 (7,49)

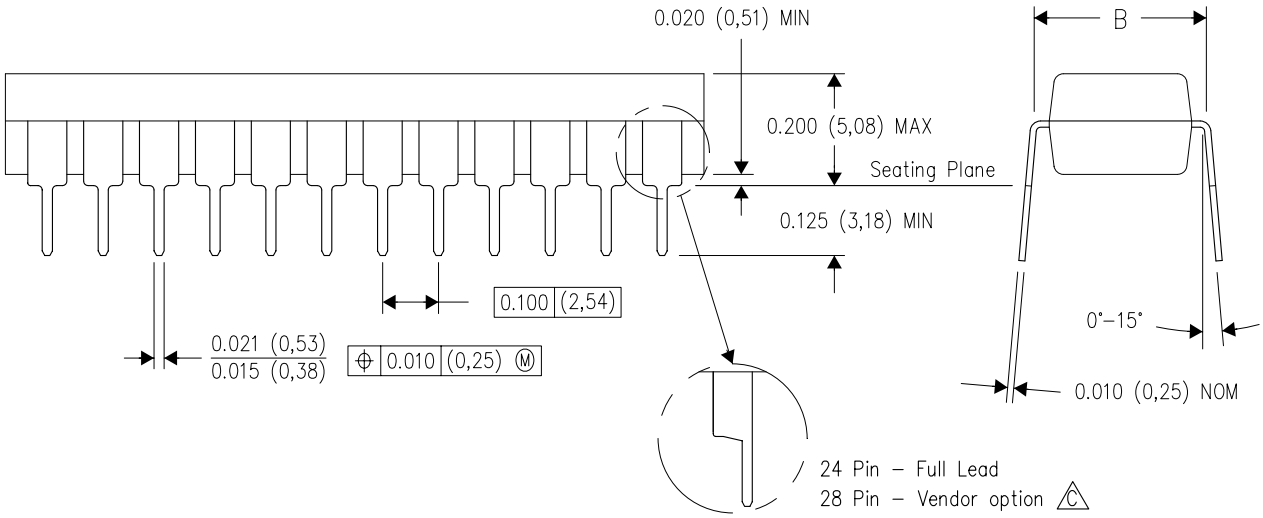

4040050/C 04/09

NOTES:
A. All linear dimensions are in millimeters. Dimensioning and tolerancing per ASME Y14.5M–1994.
B. This drawing is subject to change without notice.
C. The 28 pin end lead shoulder width is a vendor option, either half or full width.

DW (R–PDSO–G24) PLASTIC SMALL OUTLINE

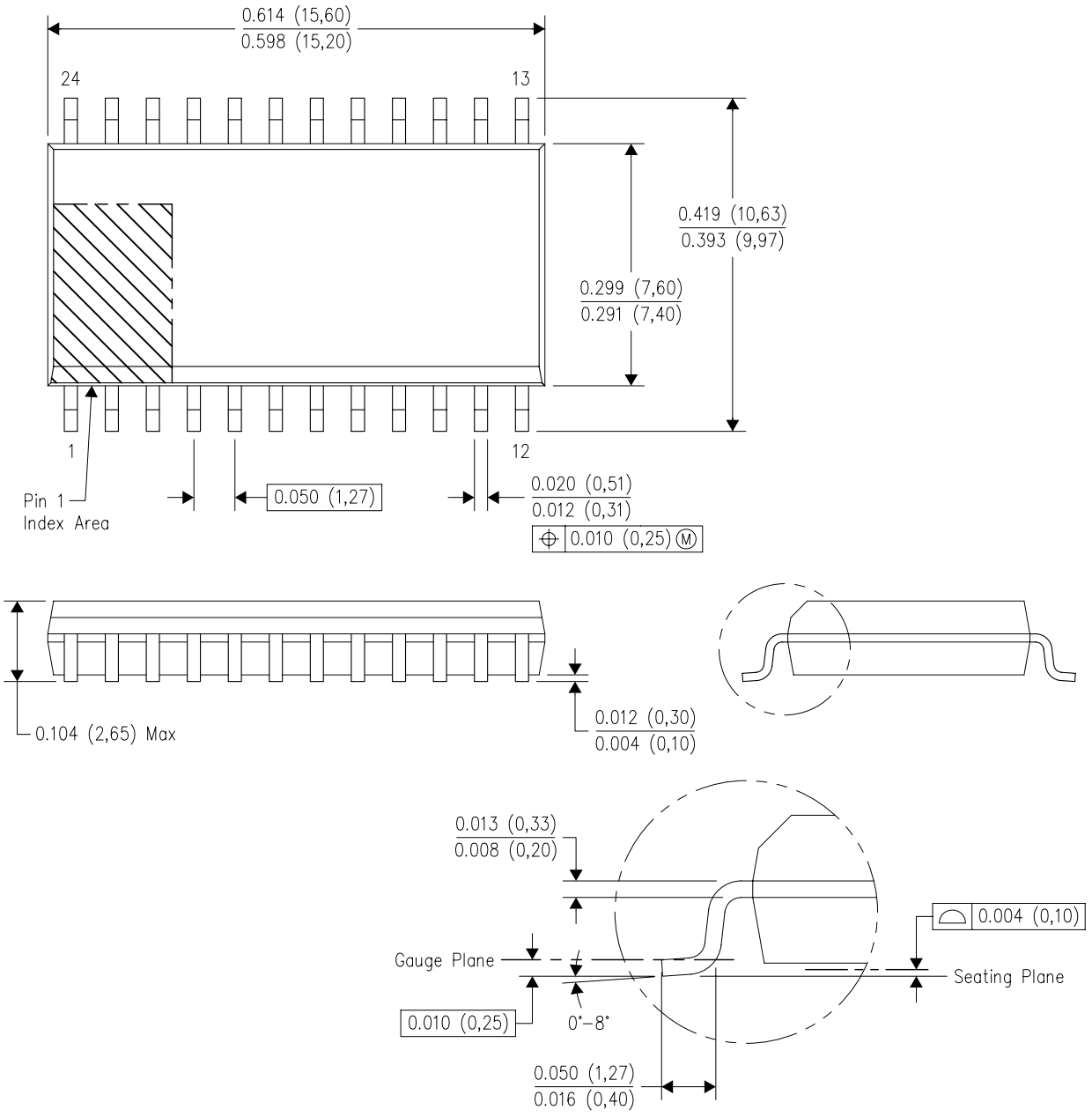

NOTES:
A. All linear dimensions are in inches (millimeters). Dimensioning and tolerancing per ASME Y14.5M–1994.
B. This drawing is subject to change without notice.
C. Body dimensions do not include mold flash or protrusion not to exceed 0.006 (0,15).
D. Falls within JEDEC MS–013 variation AD.

IMPORTANT NOTICE

Texas Instruments Incorporated and its subsidiaries (TI) reserve the right to make corrections, enhancements, improvements and other changes to its semiconductor products and services per JESD46, latest issue, and to discontinue any product or service per JESD48, latest issue. Buyers should obtain the latest relevant information before placing orders and should verify that such information is current and complete. All semiconductor products (also referred to herein as “components”) are sold subject to TI’s terms and conditions of sale supplied at the time of order acknowledgment.

TI warrants performance of its components to the specifications applicable at the time of sale, in accordance with the warranty in TI’s terms and conditions of sale of semiconductor products. Testing and other quality control techniques are used to the extent TI deems necessary to support this warranty. Except where mandated by applicable law, testing of all parameters of each component is not necessarily performed.

TI assumes no liability for applications assistance or the design of Buyers’ products. Buyers are responsible for their products and applications using TI components. To minimize the risks associated with Buyers’ products and applications, Buyers should provide adequate design and operating safeguards.

TI does not warrant or represent that any license, either express or implied, is granted under any patent right, copyright, mask work right, or other intellectual property right relating to any combination, machine, or process in which TI components or services are used. Information published by TI regarding third-party products or services does not constitute a license to use such products or services or a warranty or endorsement thereof. Use of such information may require a license from a third party under the patents or other intellectual property of the third party, or a license from TI under the patents or other intellectual property of TI.

Reproduction of significant portions of TI information in TI data books or data sheets is permissible only if reproduction is without alteration and is accompanied by all associated warranties, conditions, limitations, and notices. TI is not responsible or liable for such altered documentation. Information of third parties may be subject to additional restrictions.

Resale of TI components or services with statements different from or beyond the parameters stated by TI for that component or service voids all express and any implied warranties for the associated TI component or service and is an unfair and deceptive business practice. TI is not responsible or liable for any such statements.

Buyer acknowledges and agrees that it is solely responsible for compliance with all legal, regulatory and safety-related requirements concerning its products, and any use of TI components in its applications, notwithstanding any applications-related information or support that may be provided by TI. Buyer represents and agrees that it has all the necessary expertise to create and implement safeguards which anticipate dangerous consequences of failures, monitor failures and their consequences, lessen the likelihood of failures that might cause harm and take appropriate remedial actions. Buyer will fully indemnify TI and its representatives against any damages arising out of the use of any TI components in safety-critical applications.

In some cases, TI components may be promoted specifically to facilitate safety-related applications. With such components, TI’s goal is to help enable customers to design and create their own end-product solutions that meet applicable functional safety standards and requirements. Nonetheless, such components are subject to these terms.

No TI components are authorized for use in FDA Class III (or similar life-critical medical equipment) unless authorized officers of the parties have executed a special agreement specifically governing such use.

Only those TI components which TI has specifically designated as military grade or “enhanced plastic” are designed and intended for use in military/aerospace applications or environments. Buyer acknowledges and agrees that any military or aerospace use of TI components which have ***not*** been so designated is solely at the Buyer's risk, and that Buyer is solely responsible for compliance with all legal and regulatory requirements in connection with such use.

TI has specifically designated certain components as meeting ISO/TS16949 requirements, mainly for automotive use. In any case of use of non-designated products, TI will not be responsible for any failure to meet ISO/TS16949.

Products		**Applications**	
Audio	www.ti.com/audio	Automotive and Transportation	www.ti.com/automotive
Amplifiers	amplifier.ti.com	Communications and Telecom	www.ti.com/communications
Data Converters	dataconverter.ti.com	Computers and Peripherals	www.ti.com/computers
DLP® Products	www.dlp.com	Consumer Electronics	www.ti.com/consumer-apps
DSP	dsp.ti.com	Energy and Lighting	www.ti.com/energy
Clocks and Timers	www.ti.com/clocks	Industrial	www.ti.com/industrial
Interface	interface.ti.com	Medical	www.ti.com/medical
Logic	logic.ti.com	Security	www.ti.com/security
Power Mgmt	power.ti.com	Space, Avionics and Defense	www.ti.com/space-avionics-defense
Microcontrollers	microcontroller.ti.com	Video and Imaging	www.ti.com/video
RFID	www.ti-rfid.com		
OMAP Applications Processors	www.ti.com/omap	**TI E2E Community**	e2e.ti.com
Wireless Connectivity	www.ti.com/wirelessconnectivity		

Mailing Address: Texas Instruments, Post Office Box 655303, Dallas, Texas 75265
Copyright © 2014, Texas Instruments Incorporated