M74HC51

DUAL 2 WIDE 2 INPUT AND/OR INVERT GATE

- HIGH SPEED:
  t_{PD} = 11ns (TYP.) at V_{CC} = 6V
- LOW POWER DISSIPATION:
  I_{CC} = 1µA(MAX.) at T_A=25°C
- HIGH NOISE IMMUNITY:
  $V_{NIH} = V_{NIL}$ = 28 % V_{CC} (MIN.)
- SYMMETRICAL OUTPUT IMPEDANCE:
  $|I_{OH}| = I_{OL}$ = 4mA (MIN)
- BALANCED PROPAGATION DELAYS:
  $t_{PLH} \cong t_{PHL}$
- WIDE OPERATING VOLTAGE RANGE:
  V_{CC} (OPR) = 2V to 6V
- PIN AND FUNCTION COMPATIBLE WITH 74 SERIES 51

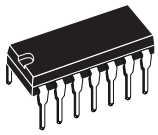

DIP

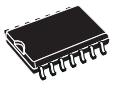

SOP



TSSOP

ORDER CODES

PACKAGE	TUBE	T & R
DIP	M74HC51B1R	
SOP	M74HC51M1R	M74HC51RM13TR
TSSOP		M74HC51TTR

DESCRIPTION

The M74HC51 is an high speed CMOS DUAL 2 WIDE 2 INPUT AND/OR INVERT GATE fabricated with silicon gate C^2MOS technology.

It contains a 2-WIDE 2-INPUT AND/OR INVERT GATE and a 2-WIDE 3-INPUT AND/OR INVERT GATE.

The internal circuit is composed of 3 stages (2 INPUT) or 5 stages (3 INPUT) including buffer output, which enables high noise immunity and stable output.

All inputs are equipped with protection circuits against static discharge and transient excess voltage.

PIN CONNECTION AND IEC LOGIC SYMBOLS

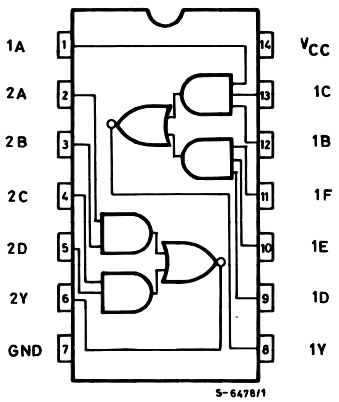

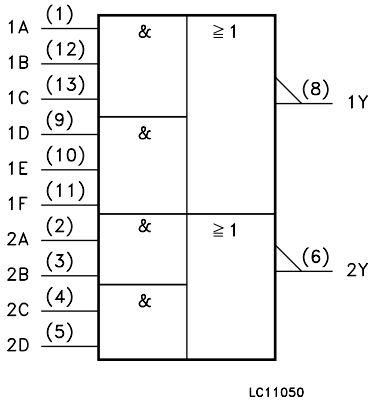

INPUT AND OUTPUT EQUIVALENT CIRCUIT

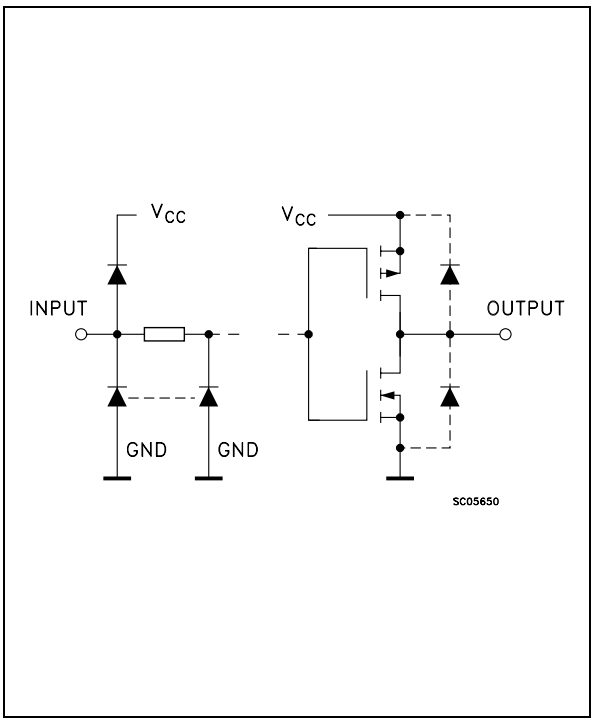

PIN DESCRIPTION

PIN No	SYMBOL	NAME AND FUNCTION
1, 12, 13, 9, 10, 11	1A to 1F	Data Inputs
2, 3, 4, 5	2A to 2D	Data Inputs
8, 6	1Y to 2Y	Data Outputs
7	GND	Ground (0V)
14	V_{CC}	Positive Supply Voltage

TRUTH TABLE

1A	1B	1C	1D	1E	1F	1Y
H	H	H	X	X	X	L
X	X	X	H	H	H	L
ALL OTHER COMBINATIONS						H

TRUTH TABLE

2A	2B	2C	2D	2Y
H	H	X	X	L
X	X	H	H	L
ALL OTHER COMBINATIONS				H

X : Don't Care

ABSOLUTE MAXIMUM RATINGS

Symbol	Parameter	Value	Unit
V_{CC}	Supply Voltage	-0.5 to +7	V
V_I	DC Input Voltage	-0.5 to V_{CC} + 0.5	V
V_O	DC Output Voltage	-0.5 to V_{CC} + 0.5	V
I_{IK}	DC Input Diode Current	± 20	mA
I_{OK}	DC Output Diode Current	± 20	mA
I_O	DC Output Current	± 25	mA
I_{CC} or I_{GND}	DC V_{CC} or Ground Current	± 50	mA
P_D	Power Dissipation	500(*)	mW
T_{stg}	Storage Temperature	-65 to +150	°C
T_L	Lead Temperature (10 sec)	300	°C

Absolute Maximum Ratings are those values beyond which damage to the device may occur. Functional operation under these conditions is not implied
(*) 500mW at 65 °C; derate to 300mW by 10mW/°C from 65°C to 85°C

RECOMMENDED OPERATING CONDITIONS

Symbol	Parameter		Value	Unit
V_{CC}	Supply Voltage		2 to 6	V
V_I	Input Voltage		0 to V_{CC}	V
V_O	Output Voltage		0 to V_{CC}	V
T_{op}	Operating Temperature		-55 to 125	°C
t_r, t_f	Input Rise and Fall Time	V_{CC} = 2.0V	0 to 1000	ns
		V_{CC} = 4.5V	0 to 500	ns
		V_{CC} = 6.0V	0 to 400	ns

DC SPECIFICATIONS

Symbol	Parameter	Test Condition		Value							Unit
		V_{CC} (V)		T_A = 25°C			-40 to 85°C		-55 to 125°C		
				Min.	Typ.	Max.	Min.	Max.	Min.	Max.	
V_{IH}	High Level Input Voltage	2.0		1.5			1.5		1.5		V
		4.5		3.15			3.15		3.15		
		6.0		4.2			4.2		4.2		
V_{IL}	Low Level Input Voltage	2.0				0.5		0.5		0.5	V
		4.5				1.35		1.35		1.35	
		6.0				1.8		1.8		1.8	
V_{OH}	High Level Output Voltage	2.0	I_O=-20 µA	1.9	2.0		1.9		1.9		V
		4.5	I_O=-20 µA	4.4	4.5		4.4		4.4		
		6.0	I_O=-20 µA	5.9	6.0		5.9		5.9		
		4.5	I_O=-4.0 mA	4.18	4.31		4.13		4.10		
		6.0	I_O=-5.2 mA	5.68	5.8		5.63		5.60		
V_{OL}	Low Level Output Voltage	2.0	I_O=20 µA		0.0	0.1		0.1		0.1	V
		4.5	I_O=20 µA		0.0	0.1		0.1		0.1	
		6.0	I_O=20 µA		0.0	0.1		0.1		0.1	
		4.5	I_O=4.0 mA		0.17	0.26		0.33		0.40	
		6.0	I_O=5.2 mA		0.18	0.26		0.33		0.40	
I_I	Input Leakage Current	6.0	V_I = V_{CC} or GND			± 0.1		± 1		± 1	µA
I_{CC}	Quiescent Supply Current	6.0	V_I = V_{CC} or GND			1		10		20	µA

AC ELECTRICAL CHARACTERISTICS (C_L = 50 pF, Input $t_r = t_f$ = 6ns)

Symbol	Parameter	Test Condition		Value							Unit
		V_{CC} (V)		T_A = 25°C			-40 to 85°C		-55 to 125°C		
				Min.	Typ.	Max.	Min.	Max.	Min.	Max.	
t_{TLH} t_{THL}	Output Transition Time	2.0			30	75		95		110	ns
		4.5			8	15		19		22	
		6.0			7	13		16		19	
t_{PLH} t_{PHL}	Propagation Delay Time	2.0			39	100		125		150	ns
		4.5			13	20		25		30	
		6.0			11	17		21		26	

CAPACITIVE CHARACTERISTICS

Symbol	Parameter	Test Condition		Value							Unit
		V_{CC} (V)		T_A = 25°C			-40 to 85°C		-55 to 125°C		
				Min.	Typ.	Max.	Min.	Max.	Min.	Max.	
C_{IN}	Input Capacitance	5.0			5	10		10		10	pF
C_{PD}	Power Dissipation Capacitance (note 1)	5.0			32						pF

1) C_{PD} is defined as the value of the IC's internal equivalent capacitance which is calculated from the operating current consumption without load. (Refer to Test Circuit). Average operating current can be obtained by the following equation. $I_{CC(opr)} = C_{PD} \times V_{CC} \times f_{IN} + I_{CC}$

TEST CIRCUIT

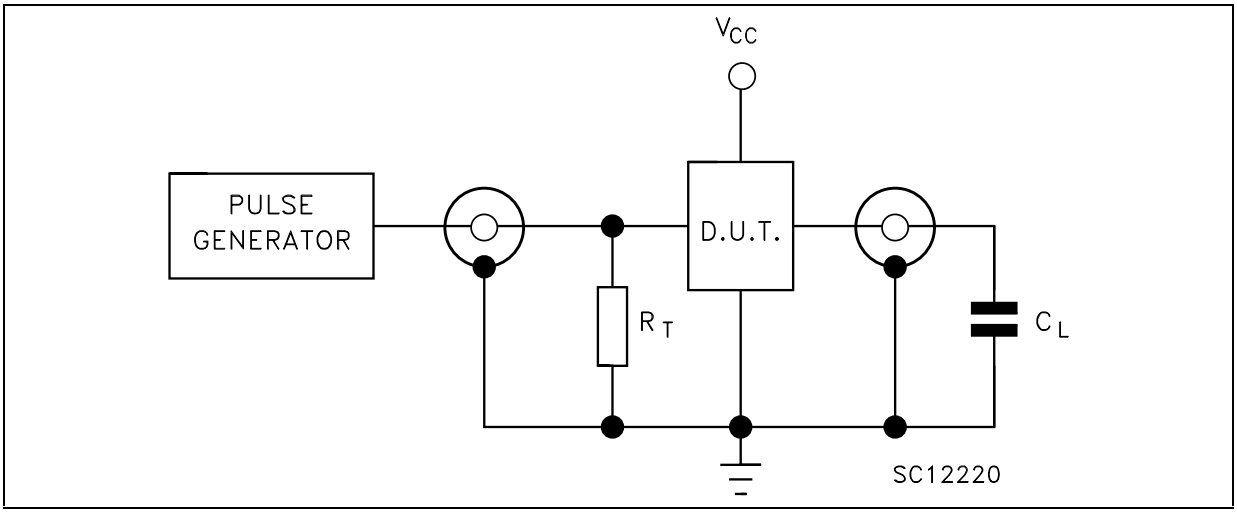

C_L = 50pF or equivalent (includes jig and probe capacitance)
$R_T = Z_{OUT}$ of pulse generator (typically 50Ω)

WAVEFORM : PROPAGATION DELAY TIMES (f=1MHz; 50% duty cycle)

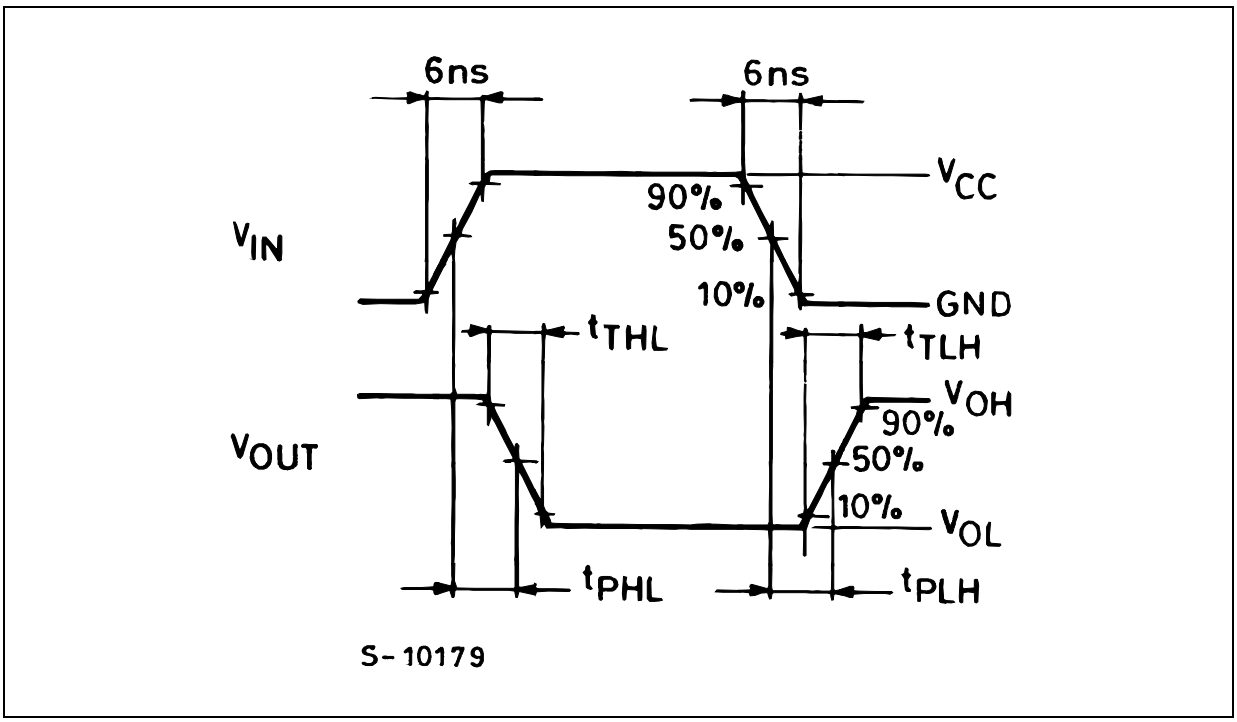

Plastic DIP-14 MECHANICAL DATA

DIM.	mm.			inch		
	MIN.	TYP	MAX.	MIN.	TYP.	MAX.
a1	0.51			0.020		
B	1.39		1.65	0.055		0.065
b		0.5			0.020	
b1		0.25			0.010	
D			20			0.787
E		8.5			0.335	
e		2.54			0.100	
e3		15.24			0.600	
F			7.1			0.280
I			5.1			0.201
L		3.3			0.130	
Z	1.27		2.54	0.050		0.100

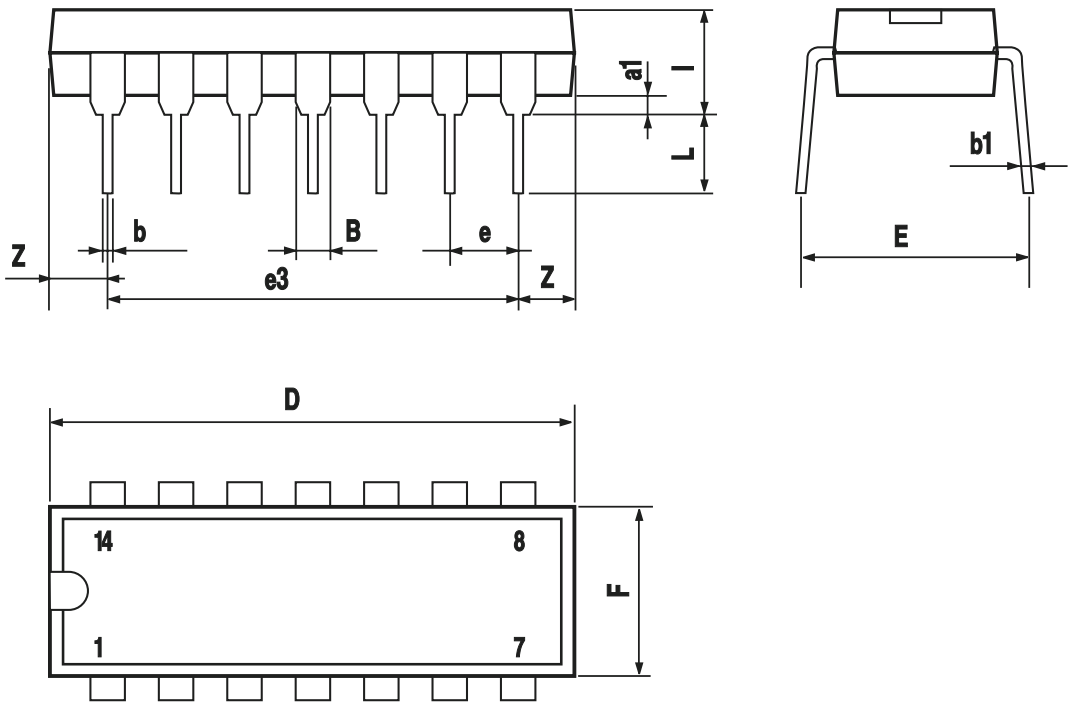

P001A

SO-14 MECHANICAL DATA

DIM.	mm.			inch		
	MIN.	TYP	MAX.	MIN.	TYP.	MAX.
A			1.75			0.068
a1	0.1		0.2	0.003		0.007
a2			1.65			0.064
b	0.35		0.46	0.013		0.018
b1	0.19		0.25	0.007		0.010
C		0.5			0.019	
c1	45° (typ.)					
D	8.55		8.75	0.336		0.344
E	5.8		6.2	0.228		0.244
e		1.27			0.050	
e3		7.62			0.300	
F	3.8		4.0	0.149		0.157
G	4.6		5.3	0.181		0.208
L	0.5		1.27	0.019		0.050
M			0.68			0.026
S	8° (max.)					

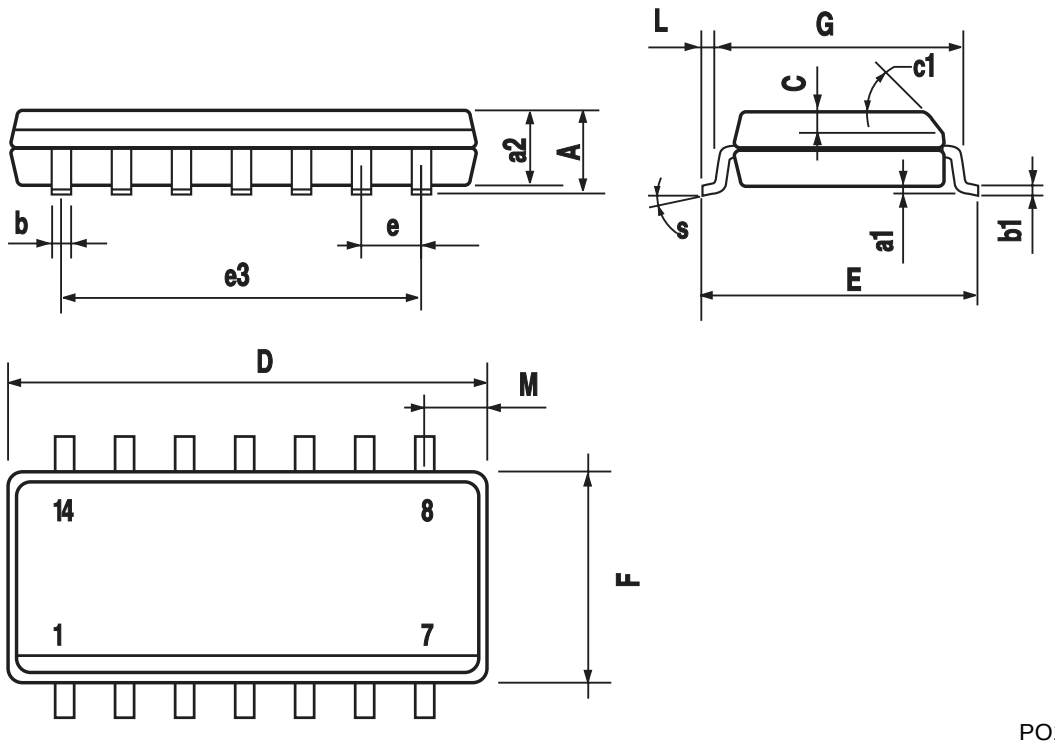

PO13G

TSSOP14 MECHANICAL DATA

DIM.	mm.			inch		
	MIN.	TYP	MAX.	MIN.	TYP.	MAX.
A			1.2			0.047
A1	0.05		0.15	0.002	0.004	0.006
A2	0.8	1	1.05	0.031	0.039	0.041
b	0.19		0.30	0.007		0.012
c	0.09		0.20	0.004		0.0089
D	4.9	5	5.1	0.193	0.197	0.201
E	6.2	6.4	6.6	0.244	0.252	0.260
E1	4.3	4.4	4.48	0.169	0.173	0.176
e		0.65 BSC			0.0256 BSC	
K	0°		8°	0°		8°
L	0.45	0.60	0.75	0.018	0.024	0.030

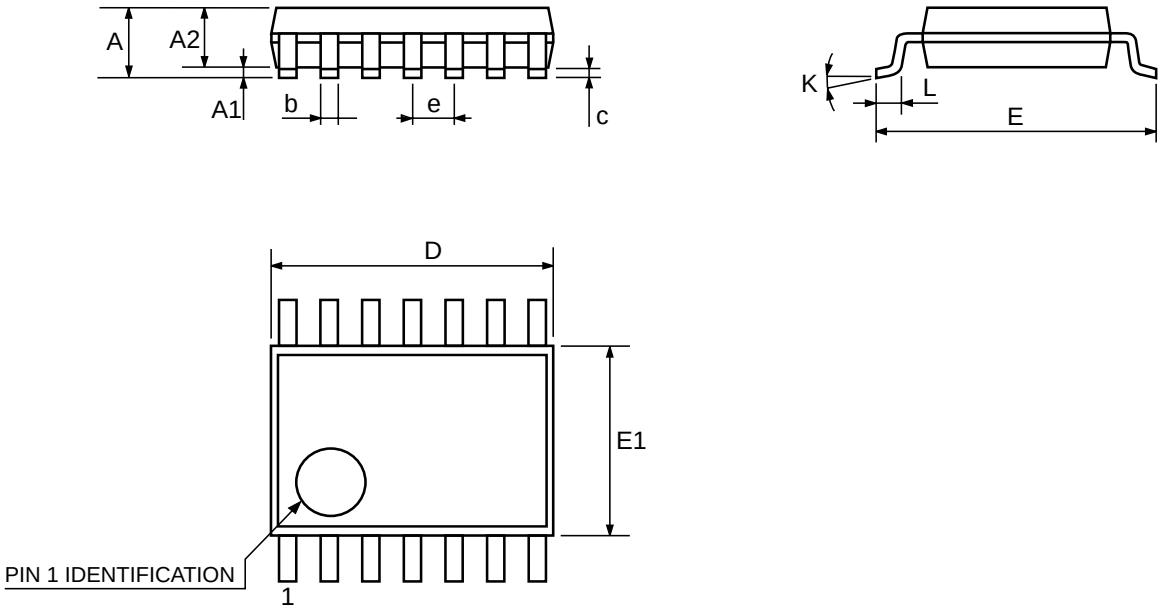

Information furnished is believed to be accurate and reliable. However, STMicroelectronics assumes no responsibility for the consequences of use of such information nor for any infringement of patents or other rights of third parties which may result from its use. No license is granted by implication or otherwise under any patent or patent rights of STMicroelectronics. Specifications mentioned in this publication are subject to change without notice. This publication supersedes and replaces all information previously supplied. STMicroelectronics products are not authorized for use as critical components in life support devices or systems without express written approval of STMicroelectronics.

© The ST logo is a registered trademark of STMicroelectronics

© 2001 STMicroelectronics - Printed in Italy - All Rights Reserved
STMicroelectronics GROUP OF COMPANIES
Australia - Brazil - China - Finland - France - Germany - Hong Kong - India - Italy - Japan - Malaysia - Malta - Morocco
Singapore - Spain - Sweden - Switzerland - United Kingdom
© http://www.st.com