- **Injection-Current Cross Coupling <1mV/mA (see Figure 1)**
- **Low Crosstalk Between Switches**
- **Pin Compatible With SN74HC4051, SN74LV4051A, and CD4051B**
- **2-V to 6-V V_{CC} Operation**
- **Latch-Up Performance Exceeds 100 mA Per JESD 78, Class II**
- **ESD Protection Exceeds JESD 22**
  - **2000-V Human-Body Model (A114-A)**
  - **200-V Machine Model (A115-A)**
  - **1000-V Charged-Device Model (C101)**

D, DGV, N, OR PW PACKAGE
(TOP VIEW)

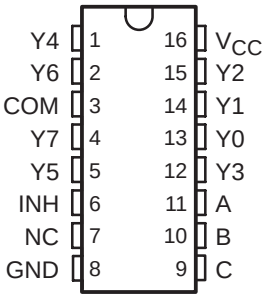

NC − No internal connection

description/ordering information

This eight-channel CMOS analog multiplexer/demultiplexer is pin compatible with the ’4051 function and, additionally, features injection-current effect control, which has excellent value in automotive applications where voltages in excess of normal supply voltages are common.

The injection-current effect control allows signals at disabled analog input channels to exceed the supply voltage without affecting the signal of the enabled analog channel. This eliminates the need for external diode/resistor networks typically used to keep the analog channel signals within the supply-voltage range.

ORDERING INFORMATION

T_A	PACKAGE†		ORDERABLE PART NUMBER	TOP-SIDE MARKING
−40°C to 125°C	PDIP − N	Tube	SN74HC4851N	HC4851N
	SOIC − D	Tube	SN74HC4851D	HC4851
		Tape and reel	SN74HC4851DR	
	TSSOP − PW	Tube	SN74HC4851PW	HC4851
		Tape and reel	SN74HC4851PWR	
	TVSOP − DGV	Tape and reel	SN74HC4851DGVR	HC4851

† Package drawings, standard packing quantities, thermal data, symbolization, and PCB design guidelines are available at www.ti.com/sc/package.

Please be aware that an important notice concerning availability, standard warranty, and use in critical applications of Texas Instruments semiconductor products and disclaimers thereto appears at the end of this data sheet.

PRODUCTION DATA information is current as of publication date. Products conform to specifications per the terms of Texas Instruments standard warranty. Production processing does not necessarily include testing of all parameters.

Copyright © 2004, Texas Instruments Incorporated

FUNCTION TABLE

INPUTS				ON CHANNEL
INH	C	B	A	
L	L	L	L	Y0
L	L	L	H	Y1
L	L	H	L	Y2
L	L	H	H	Y3
L	H	L	L	Y4
L	H	L	H	Y5
L	H	H	L	Y6
L	H	H	H	Y7
H	X	X	X	None

logic diagram (positive logic)

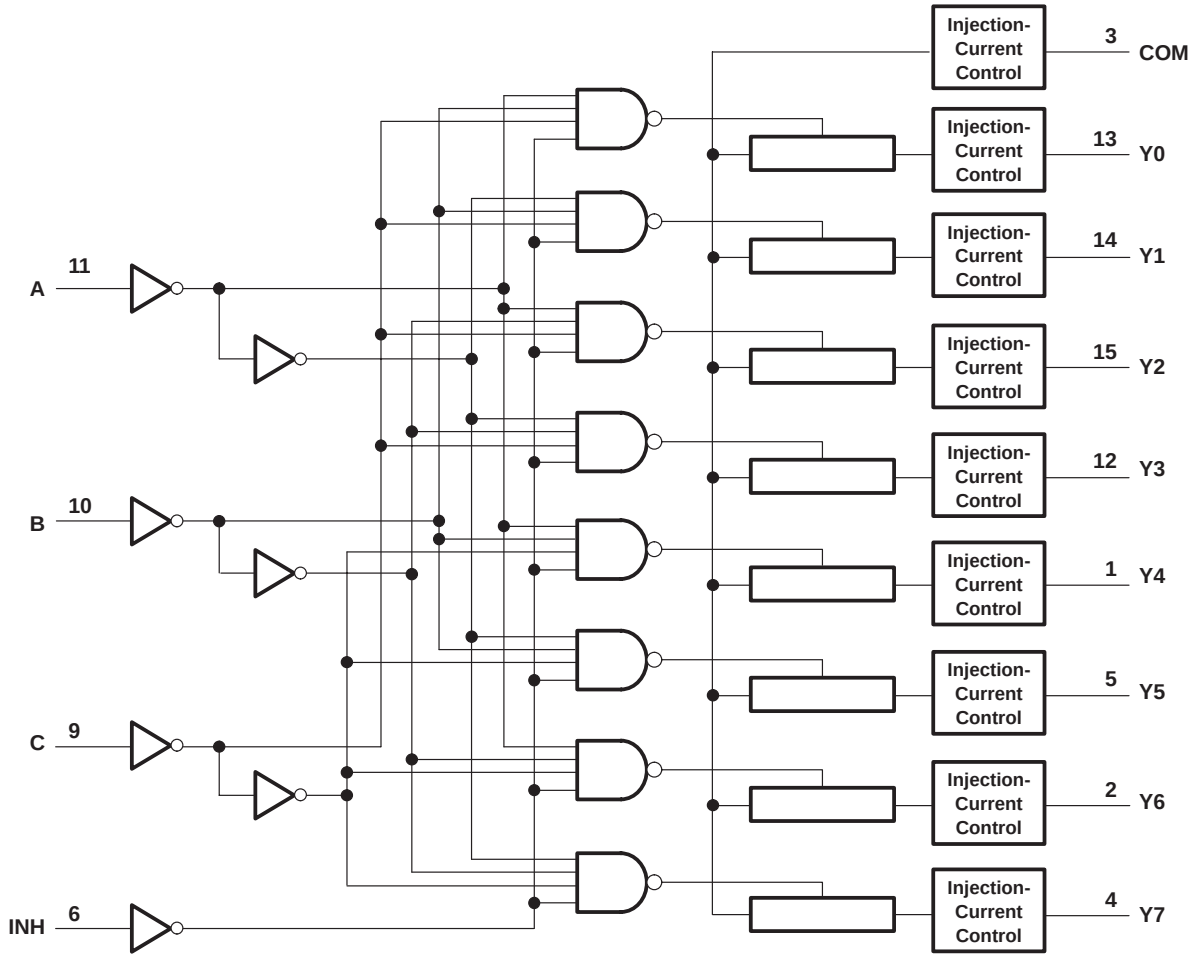

absolute maximum ratings over operating free-air temperature range (unless otherwise noted)†

Supply voltage range, V_{CC} . . . . . −0.5 V to 7 V
Input voltage range, V_I (see Note 1) . . . . . −0.5 V to V_{CC} + 0.5 V
Switch I/O voltage range, V_{IO} (see Notes 1 and 2) . . . . . −0.5 V to V_{CC} + 0.5 V
Input clamp current, I_{IK} (V_I < 0 or V_I > V_{CC}) . . . . . ±20 mA
I/O diode current, I_{IOK} (V_{IO} < 0 or V_{IO} > V_{CC}) . . . . . ±20 mA
Switch through current, I_T (V_{IO} = 0 to V_{CC}) . . . . . ±25 mA
Continuous current through V_{CC} or GND . . . . . ±50 mA
Package thermal impedance, θ_{JA} (see Note 3): D package . . . . . 73°C/W
DGV package . . . . . 120°C/W
N package . . . . . 67°C/W
PW package . . . . . 108°C/W
Storage temperature range, T_{stg} . . . . . −65°C to 150°C

† Stresses beyond those listed under “absolute maximum ratings” may cause permanent damage to the device. These are stress ratings only, and functional operation of the device at these or any other conditions beyond those indicated under “recommended operating conditions” is not implied. Exposure to absolute-maximum-rated conditions for extended periods may affect device reliability.

NOTES: 1. The input and output voltage ratings may be exceeded if the input and output current ratings are observed.
2. This value is limited to 5.5 V maximum.
3. The package thermal impedance is calculated in accordance with JESD 51-7.

recommended operating conditions (see Note 4)

			MIN	MAX	UNIT
V_{CC}	Supply voltage		2	6	V
V_{IH}	High-level input voltage, control inputs	V_{CC} = 2 V	1.5		V
		V_{CC} = 3 V	2.1		
		V_{CC} = 3.3 V	2.3		
		V_{CC} = 4.5 V	3.15		
		V_{CC} = 6 V	4.2		
V_{IL}	Low-level input voltage, control inputs	V_{CC} = 2 V		0.5	V
		V_{CC} = 3 V		0.9	
		V_{CC} = 3.3 V		1	
		V_{CC} = 4.5 V		1.35	
		V_{CC} = 6 V		1.8	
V_I	Control input voltage		0	V_{CC}	V
V_{IO}	Input/output voltage		0	V_{CC}	V
$\Delta t/\Delta v$	Input transition rise or fall time	V_{CC} = 2 V		1000	ns
		V_{CC} = 3 V		800	
		V_{CC} = 3.3 V		700	
		V_{CC} = 4.5 V		500	
		V_{CC} = 6 V		400	
T_A	Operating free-air temperature		−40	125	°C

NOTE 4: All unused inputs of the device must be held at V_{CC} or GND to ensure proper device operation. Refer to the TI application report, *Implications of Slow or Floating CMOS Inputs*, literature number SCBA004.

electrical characteristics over recommended operating free-air temperature range (unless otherwise noted)

PARAMETER		TEST CONDITIONS	V_{CC}	T_A = 25°C			UP TO 85°C		UP TO 125°C		UNIT
				MIN	TYP	MAX	MIN	MAX	MIN	MAX	
r_{on}	On-state switch resistance	$I_T \le 2$ mA, $V_I = V_{CC}$ to GND, $V_{INH} = V_{IL}$ (see Figure 5)	2.V		500	650		670		700	Ω
			3 V		215	280		320		360	
			3.3 V		210	270		305		345	
			4.5 V		160	210		240		270	
			6 V		150	195		220		250	
Δr_{on}	Difference in on-state resistance between switches	$I_T \le 2$ mA, $V_I = V_{CC}/2$, $V_{INH} = V_{IL}$	2.V		4	10		15		20	Ω
			3 V		2	8		12		16	
			3.3 V		2	8		12		16	
			4.5 V		2	8		12		16	
			6 V		3	9		13		18	
I_I	Control input current	$V_I = V_{CC}$ or GND	6 V			±0.1		±0.1		±1	μA
$I_{S(off)}$	Off-state switch leakage current (any one channel)	$V_I = V_{CC}$ or GND, $V_{INH} = V_{IH}$ (see Figure 6)	6 V			±0.1		±0.5		±1	μA
	Off-state switch leakage current (common channel)	$V_I = V_{CC}$ or GND, $V_{INH} = V_{IH}$ (see Figure 7)				±0.2		±2		±4	
$I_{S(on)}$	On-state switch leakage current	$V_I = V_{CC}$ or GND, $V_{INH} = V_{IL}$ (see Figure 8)	6 V			±0.1		±0.5		±1	μA
I_{CC}	Supply current	$V_I = V_{CC}$ or GND	6 V			2		20		40	μA
C_{IC}	Control input capacitance	A, B, C, INH			3.5	10		10		10	pF
C_{IS}	Common terminal capacitance	Switch off			22	40		40		40	pF
C_{OS}	Switch terminal capacitance	Switch off			6.7	15		15		15	pF

injection current coupling specifications, T_A = −40°C to 125°C

PARAMETER		V_{CC}	TEST CONDITIONS		MIN	TYP†	MAX	UNIT
$V\Delta_{out}$	Maximum shift of output voltage of enabled analog channel	3.3 V	$R_S \le 3.9$ kΩ	I_I‡ ≤ 1 mA		0.05	1	mV
		5 V				0.1	1	
		3.3 V		I_I‡ ≤ 10 mA		0.345	5	
		5 V				0.067	5	
		3.3 V	$R_S \le 20$ kΩ	I_I‡ ≤ 1 mA		0.05	2	
		5 V				0.11	2	
		3.3 V		I_I‡ ≤ 10 mA		0.05	20	
		5 V				0.024	20	

† Typical values are measured at T_A = 25°C.
‡ I_I = total current injected into all disabled channels

switching characteristics over recommended operating free-air temperature range, V_{CC} = 2 V, C_L = 50 pF (unless otherwise noted) (see Figures 9−14)

PARAMETER		FROM (INPUT)	TO (OUTPUT)	T_A = 25°C			UP TO 85°C		UP TO 125°C		UNIT
				MIN	TYP	MAX	MIN	MAX	MIN	MAX	
t_{PLH} t_{PHL}	Propagation delay time	COM or Yn	Yn or COM		19.5	25		29		32	ns
t_{PLH} t_{PHL}	Propagation delay time	Channel Select	COM or Yn		23	30		35		40	ns
t_{PZH} t_{PZL}	Enable delay time	INH	COM or Yn			95		105		115	ns
t_{PHZ} t_{PLZ}	Disable delay time	INH	COM or Yn			95		105		115	ns

switching characteristics over recommended operating free-air temperature range, V_{CC} = 3 V, C_L = 50 pF (unless otherwise noted) (see Figures 9−14)

PARAMETER		FROM (INPUT)	TO (OUTPUT)	T_A = 25°C			UP TO 85°C		UP TO 125°C		UNIT
				MIN	TYP	MAX	MIN	MAX	MIN	MAX	
t_{PLH} t_{PHL}	Propagation delay time	COM or Yn	Yn or COM		12	15.5		17.5		19.5	ns
t_{PLH} t_{PHL}	Propagation delay time	Channel Select	COM or Yn		13.5	17.5		20		23	ns
t_{PZH} t_{PZL}	Enable delay time	INH	COM or Yn			90		100		110	ns
t_{PHZ} t_{PLZ}	Disable delay time	INH	COM or Yn			90		100		110	ns

switching characteristics over recommended operating free-air temperature range, V_{CC} = 3.3 V, C_L = 50 pF (unless otherwise noted) (see Figures 9−14)

PARAMETER		FROM (INPUT)	TO (OUTPUT)	T_A = 25°C			UP TO 85°C		UP TO 125°C		UNIT
				MIN	TYP	MAX	MIN	MAX	MIN	MAX	
t_{PLH} t_{PHL}	Propagation delay time	COM or Yn	Yn or COM		11	14.5		16.5		18.5	ns
t_{PLH} t_{PHL}	Propagation delay time	Channel Select	COM or Yn		12.5	16.5		19		22	ns
t_{PZH} t_{PZL}	Enable delay time	INH	COM or Yn			85		95		105	ns
t_{PHZ} t_{PLZ}	Disable delay time	INH	COM or Yn			85		95		105	ns

switching characteristics over recommended operating free-air temperature range, V_{CC} = 4.5 V, C_L = 50 pF (unless otherwise noted) (see Figures 9−14)

PARAMETER		FROM (INPUT)	TO (OUTPUT)	T_A = 25°C			UP TO 85°C		UP TO 125°C		UNIT
				MIN	TYP	MAX	MIN	MAX	MIN	MAX	
t_{PLH} t_{PHL}	Propagation delay time	COM or Yn	Yn or COM		8.6	11.5		12.5		13.5	ns
t_{PLH} t_{PHL}	Propagation delay time	Channel Select	COM or Yn		10	13		15		17	ns
t_{PZH} t_{PZL}	Enable delay time	INH	COM or Yn			80		90		100	ns
t_{PHZ} t_{PLZ}	Disable delay time	INH	COM or Yn			80		90		100	ns

switching characteristics over recommended operating free-air temperature range, V_{CC} = 6 V, C_L = 50 pF (unless otherwise noted) (see Figures 9−14)

PARAMETER		FROM (INPUT)	TO (OUTPUT)	T_A = 25°C			UP TO 85°C		UP TO 125°C		UNIT
				MIN	TYP	MAX	MIN	MAX	MIN	MAX	
t_{PLH} t_{PHL}	Propagation delay time	COM or Yn	Yn or COM		8	10		11		12	ns
t_{PLH} t_{PHL}	Propagation delay time	Channel Select	COM or Yn		9.5	12.5		14.5		16.5	ns
t_{PZH} t_{PZL}	Enable delay time	INH	COM or Yn			78		80		80	ns
t_{PHZ} t_{PLZ}	Disable delay time	INH	COM or Yn			78		80		80	ns

operating characteristics, T_A = 25°C (see Figure 15)

PARAMETER		V_{CC}	TEST CONDITIONS	TYP	UNIT
C_{pd}	Power dissipation capacitance	3.3 V	No load	32	pF
		5 V		37	

APPLICATION INFORMATION

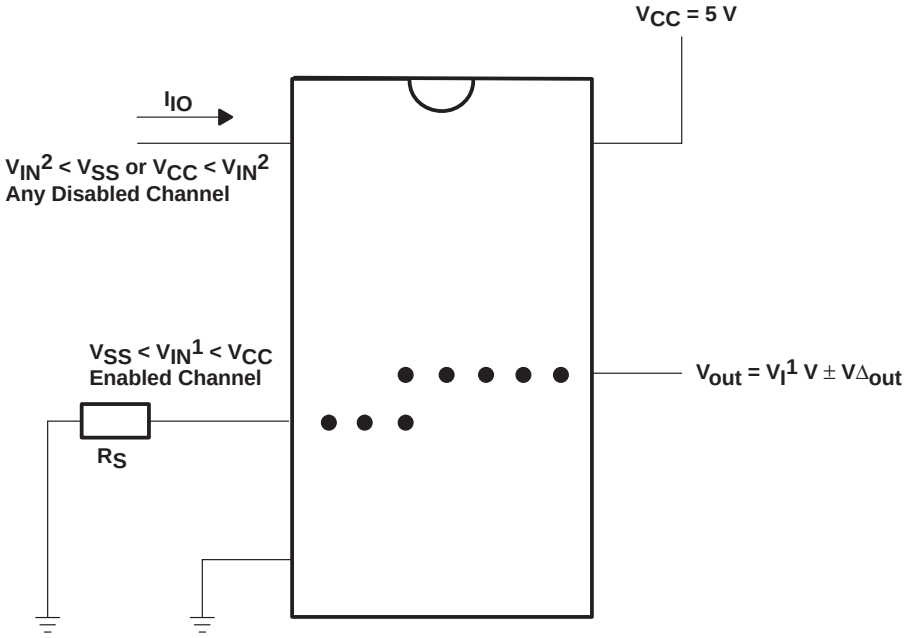

Figure 1. Injection-Current Coupling Specification

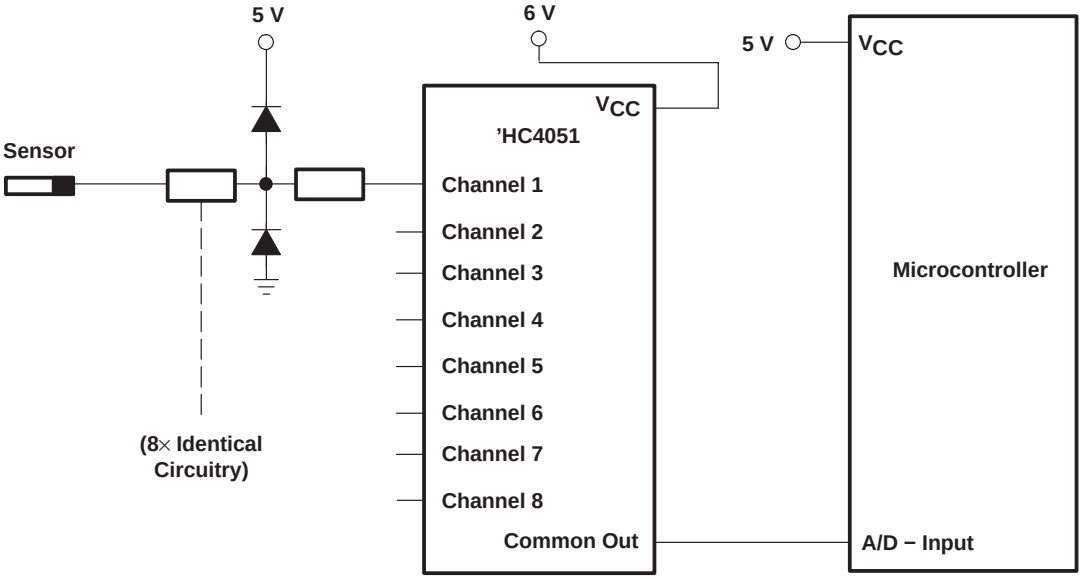

Figure 2. Alternate Solution Requires 32 Passive Components and One Extra 6-V Regulator to Suppress Injection Current Into a Standard 'HC4051 Multiplexer

APPLICATION INFORMATION

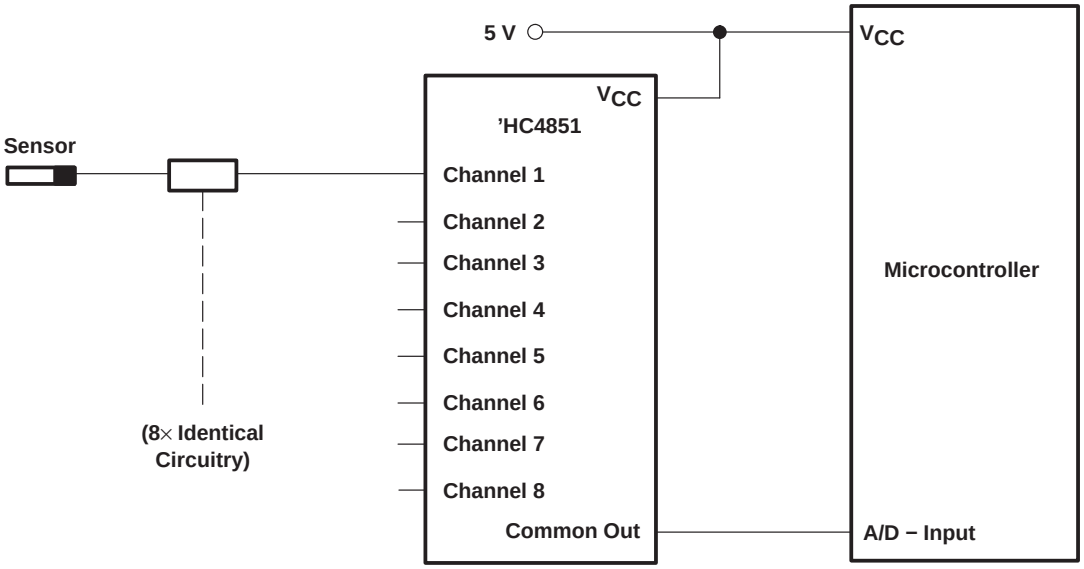

Figure 3. Solution by Applying the 'HC4851 Multiplexer

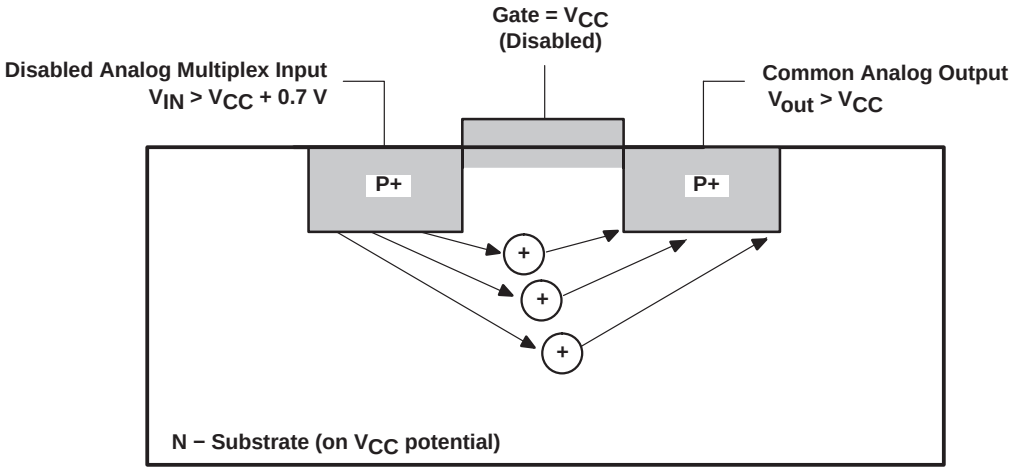

Figure 4. Diagram of Bipolar Coupling Mechanism (Appears if V_{IN} Exceeds V_{CC}, Driving Injection Current Into the Substrate)

PARAMETER MEASUREMENT INFORMATION

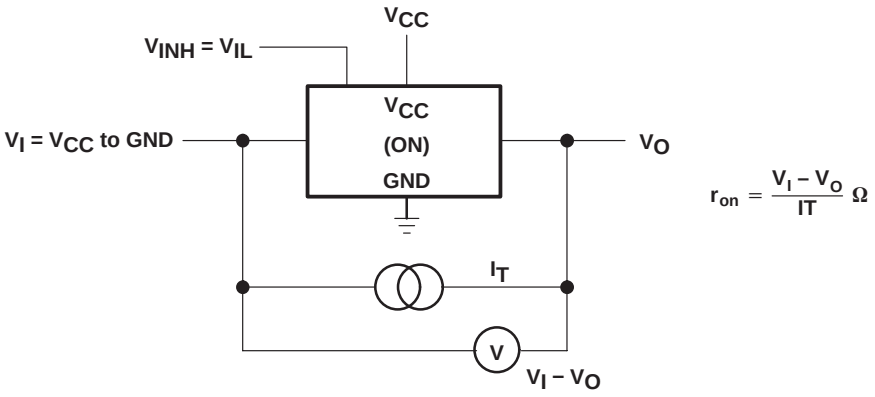

Figure 5. On-State-Resistance Test Circuit

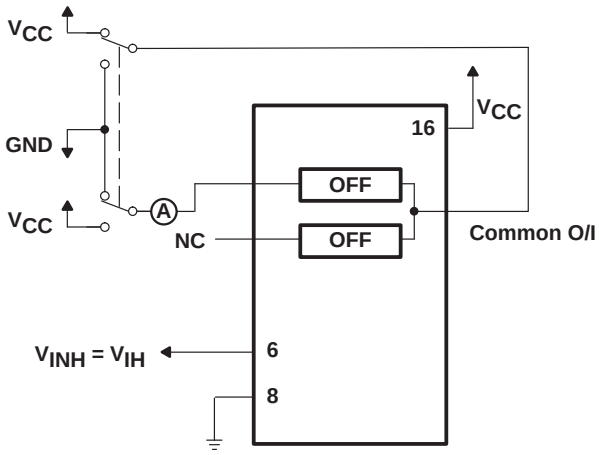

Figure 6. Maximum Off-Channel Leakage Current, Any One Channel, Test Setup

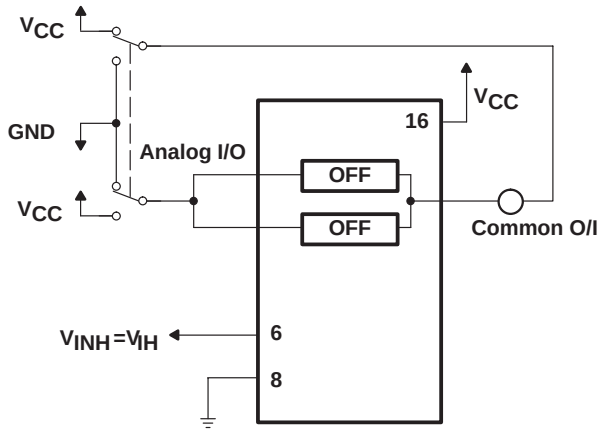

Figure 7. Maximum Off-Channel Leakage Current, Common Channel, Test Setup

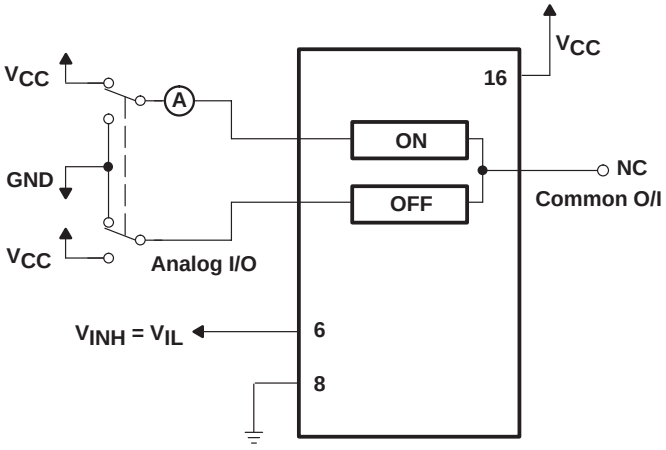

Figure 8. Maximum On-Channel Leakage Current, Channel To Channel, Test Setup

PARAMETER MEASUREMENT INFORMATION

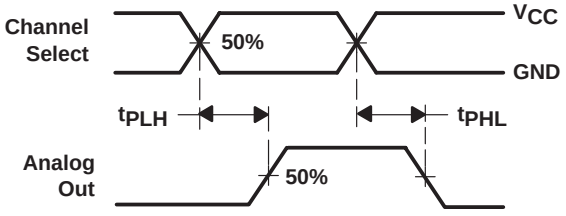

Figure 9. Propagation Delays, Channel Select to Analog Out

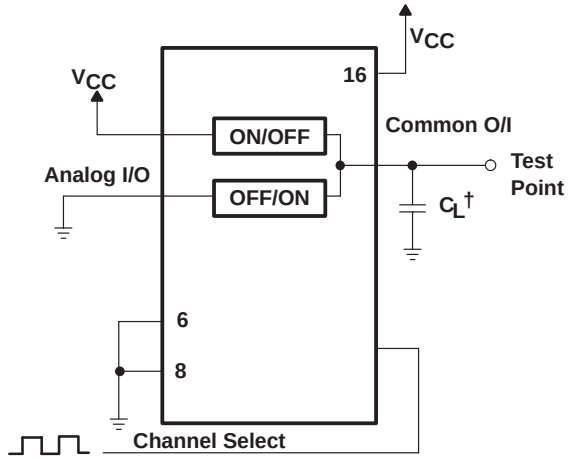

† Includes all probe and jig capacitance

Figure 10. Propagation-Delay Test Setup, Channel Select to Analog Out

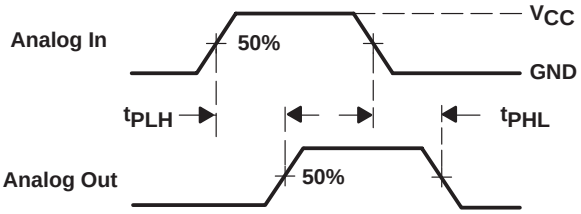

Figure 11. Propagation Delays, Analog In to Analog Out

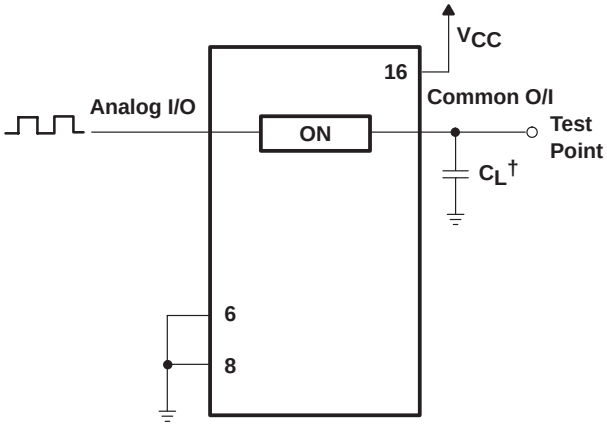

† Includes all probe and jig capacitance

Figure 12. Propagation-Delay Test Setup, Analog In to Analog Out

PARAMETER MEASUREMENT INFORMATION

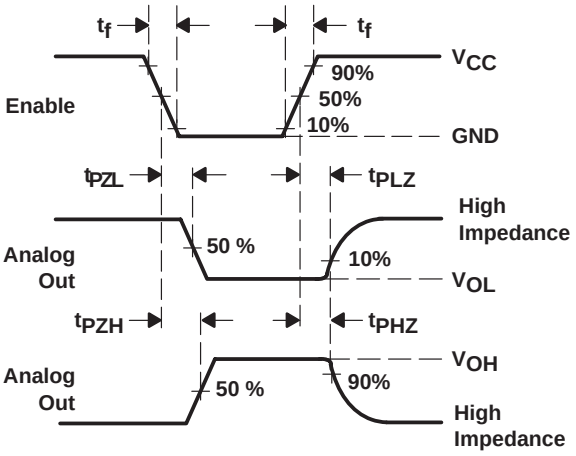

Figure 13. Propagation Delays, Enable to Analog Out

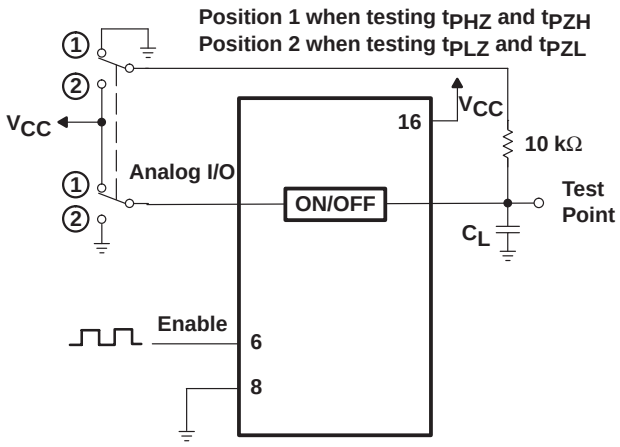

Figure 14. Propagation-Delay Test Setup, Enable to Analog Out

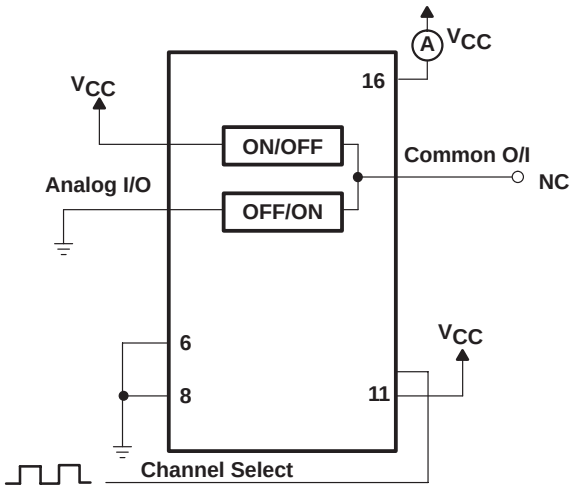

Figure 15. Power-Dissipation Capacitance Test Setup

PACKAGING INFORMATION

Orderable Device	Status (1)	Package Type	Package Drawing	Pins	Package Qty	Eco Plan (2)	Lead/Ball Finish (6)	MSL Peak Temp (3)	Op Temp (°C)	Device Marking (4/5)	Samples
SN74HC4851D	ACTIVE	SOIC	D	16	40	Green (RoHS & no Sb/Br)	CU NIPDAU	Level-1-260C-UNLIM	-40 to 125	HC4851	Samples
SN74HC4851DG4	ACTIVE	SOIC	D	16	40	Green (RoHS & no Sb/Br)	CU NIPDAU	Level-1-260C-UNLIM	-40 to 125	HC4851	Samples
SN74HC4851DGVR	ACTIVE	TVSOP	DGV	16	2000	Green (RoHS & no Sb/Br)	CU NIPDAU	Level-1-260C-UNLIM	-40 to 125	HC4851	Samples
SN74HC4851DR	ACTIVE	SOIC	D	16	2500	Green (RoHS & no Sb/Br)	CU NIPDAU | CU SN	Level-1-260C-UNLIM	-40 to 125	HC4851	Samples
SN74HC4851DRE4	ACTIVE	SOIC	D	16	2500	Green (RoHS & no Sb/Br)	CU NIPDAU	Level-1-260C-UNLIM	-40 to 125	HC4851	Samples
SN74HC4851DRG4	ACTIVE	SOIC	D	16	2500	Green (RoHS & no Sb/Br)	CU NIPDAU	Level-1-260C-UNLIM	-40 to 125	HC4851	Samples
SN74HC4851N	ACTIVE	PDIP	N	16	25	Pb-Free (RoHS)	CU NIPDAU	N / A for Pkg Type	-40 to 125	SN74HC4851N	Samples
SN74HC4851NE4	ACTIVE	PDIP	N	16	25	Pb-Free (RoHS)	CU NIPDAU	N / A for Pkg Type	-40 to 125	SN74HC4851N	Samples
SN74HC4851PW	ACTIVE	TSSOP	PW	16	90	Green (RoHS & no Sb/Br)	CU NIPDAU	Level-1-260C-UNLIM	-40 to 125	HC4851	Samples
SN74HC4851PWR	ACTIVE	TSSOP	PW	16	2000	Green (RoHS & no Sb/Br)	CU NIPDAU | CU SN	Level-1-260C-UNLIM	-40 to 125	HC4851	Samples
SN74HC4851PWRG4	ACTIVE	TSSOP	PW	16	2000	Green (RoHS & no Sb/Br)	CU NIPDAU	Level-1-260C-UNLIM	-40 to 125	HC4851	Samples

(1) The marketing status values are defined as follows:
ACTIVE: Product device recommended for new designs.
LIFEBUY: TI has announced that the device will be discontinued, and a lifetime-buy period is in effect.
NRND: Not recommended for new designs. Device is in production to support existing customers, but TI does not recommend using this part in a new design.
PREVIEW: Device has been announced but is not in production. Samples may or may not be available.
OBSOLETE: TI has discontinued the production of the device.

(2) Eco Plan - The planned eco-friendly classification: Pb-Free (RoHS), Pb-Free (RoHS Exempt), or Green (RoHS & no Sb/Br) - please check http://www.ti.com/productcontent for the latest availability information and additional product content details.
TBD: The Pb-Free/Green conversion plan has not been defined.
Pb-Free (RoHS): TI's terms "Lead-Free" or "Pb-Free" mean semiconductor products that are compatible with the current RoHS requirements for all 6 substances, including the requirement that lead not exceed 0.1% by weight in homogeneous materials. Where designed to be soldered at high temperatures, TI Pb-Free products are suitable for use in specified lead-free processes.

Pb-Free (RoHS Exempt): This component has a RoHS exemption for either 1) lead-based flip-chip solder bumps used between the die and package, or 2) lead-based die adhesive used between the die and leadframe. The component is otherwise considered Pb-Free (RoHS compatible) as defined above.
Green (RoHS & no Sb/Br): TI defines "Green" to mean Pb-Free (RoHS compatible), and free of Bromine (Br) and Antimony (Sb) based flame retardants (Br or Sb do not exceed 0.1% by weight in homogeneous material)

(3) MSL, Peak Temp. - The Moisture Sensitivity Level rating according to the JEDEC industry standard classifications, and peak solder temperature.

(4) There may be additional marking, which relates to the logo, the lot trace code information, or the environmental category on the device.

(5) Multiple Device Markings will be inside parentheses. Only one Device Marking contained in parentheses and separated by a "~" will appear on a device. If a line is indented then it is a continuation of the previous line and the two combined represent the entire Device Marking for that device.

(6) Lead/Ball Finish - Orderable Devices may have multiple material finish options. Finish options are separated by a vertical ruled line. Lead/Ball Finish values may wrap to two lines if the finish value exceeds the maximum column width.

Important Information and Disclaimer: The information provided on this page represents TI's knowledge and belief as of the date that it is provided. TI bases its knowledge and belief on information provided by third parties, and makes no representation or warranty as to the accuracy of such information. Efforts are underway to better integrate information from third parties. TI has taken and continues to take reasonable steps to provide representative and accurate information but may not have conducted destructive testing or chemical analysis on incoming materials and chemicals. TI and TI suppliers consider certain information to be proprietary, and thus CAS numbers and other limited information may not be available for release.

In no event shall TI's liability arising out of such information exceed the total purchase price of the TI part(s) at issue in this document sold by TI to Customer on an annual basis.

OTHER QUALIFIED VERSIONS OF SN74HC4851 :

- Automotive: SN74HC4851-Q1

NOTE: Qualified Version Definitions:

- Automotive - Q100 devices qualified for high-reliability automotive applications targeting zero defects

TAPE AND REEL INFORMATION

REEL DIMENSIONS

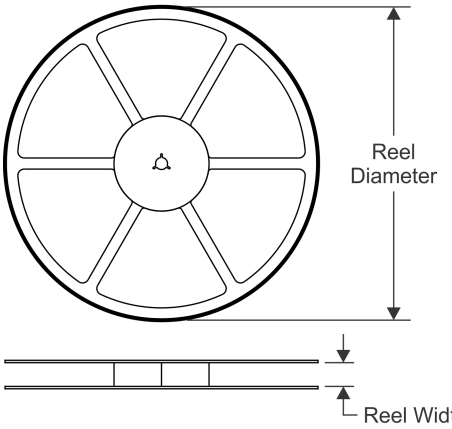

TAPE DIMENSIONS

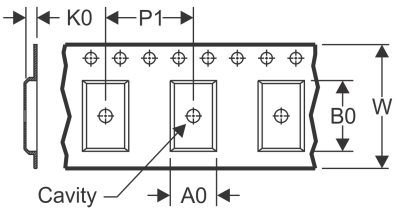

A0	Dimension designed to accommodate the component width
B0	Dimension designed to accommodate the component length
K0	Dimension designed to accommodate the component thickness
W	Overall width of the carrier tape
P1	Pitch between successive cavity centers

QUADRANT ASSIGNMENTS FOR PIN 1 ORIENTATION IN TAPE

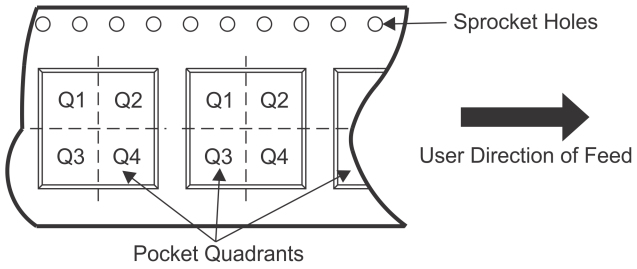

*All dimensions are nominal

Device	Package Type	Package Drawing	Pins	SPQ	Reel Diameter (mm)	Reel Width W1 (mm)	A0 (mm)	B0 (mm)	K0 (mm)	P1 (mm)	W (mm)	Pin1 Quadrant
SN74HC4851DGVR	TVSOP	DGV	16	2000	330.0	12.4	6.8	4.0	1.6	8.0	12.0	Q1
SN74HC4851DR	SOIC	D	16	2500	330.0	16.8	6.5	10.3	2.1	8.0	16.0	Q1
SN74HC4851DR	SOIC	D	16	2500	330.0	16.4	6.5	10.3	2.1	8.0	16.0	Q1
SN74HC4851DRG4	SOIC	D	16	2500	330.0	16.4	6.5	10.3	2.1	8.0	16.0	Q1
SN74HC4851PWR	TSSOP	PW	16	2000	330.0	12.4	6.9	5.6	1.6	8.0	12.0	Q1
SN74HC4851PWRG4	TSSOP	PW	16	2000	330.0	12.4	6.9	5.6	1.6	8.0	12.0	Q1

TAPE AND REEL BOX DIMENSIONS

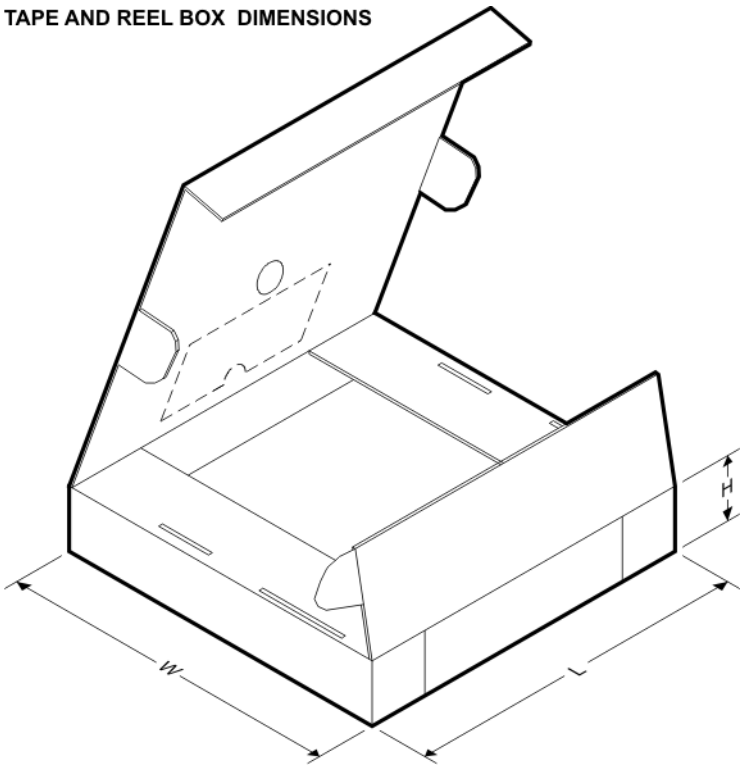

*All dimensions are nominal

Device	Package Type	Package Drawing	Pins	SPQ	Length (mm)	Width (mm)	Height (mm)
SN74HC4851DGVR	TVSOP	DGV	16	2000	367.0	367.0	35.0
SN74HC4851DR	SOIC	D	16	2500	364.0	364.0	27.0
SN74HC4851DR	SOIC	D	16	2500	333.2	345.9	28.6
SN74HC4851DRG4	SOIC	D	16	2500	333.2	345.9	28.6
SN74HC4851PWR	TSSOP	PW	16	2000	364.0	364.0	27.0
SN74HC4851PWRG4	TSSOP	PW	16	2000	367.0	367.0	35.0

N (R–PDIP–T**)

PLASTIC DUAL–IN–LINE PACKAGE

16 PINS SHOWN

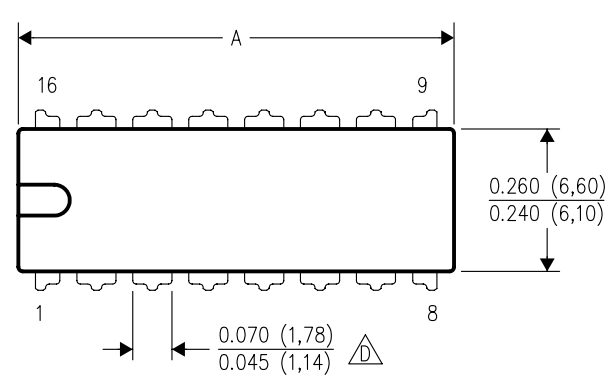

DIM \ PINS **	14	16	18	20
A MAX	0.775 (19,69)	0.775 (19,69)	0.920 (23,37)	1.060 (26,92)
A MIN	0.745 (18,92)	0.745 (18,92)	0.850 (21,59)	0.940 (23,88)
MS–001 VARIATION (C)	AA	BB	AC	AD

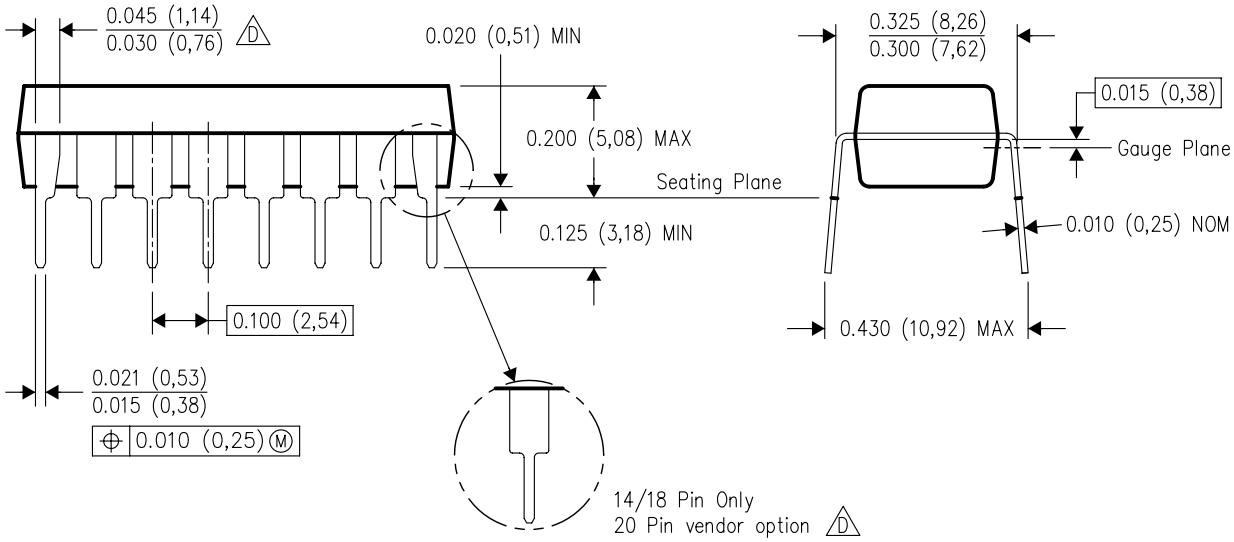

4040049/E 12/2002

NOTES:
A. All linear dimensions are in inches (millimeters).
B. This drawing is subject to change without notice.
C. Falls within JEDEC MS–001, except 18 and 20 pin minimum body length (Dim A).
D. The 20 pin end lead shoulder width is a vendor option, either half or full width.

DGV (R-PDSO-G)** **PLASTIC SMALL-OUTLINE**

24 PINS SHOWN

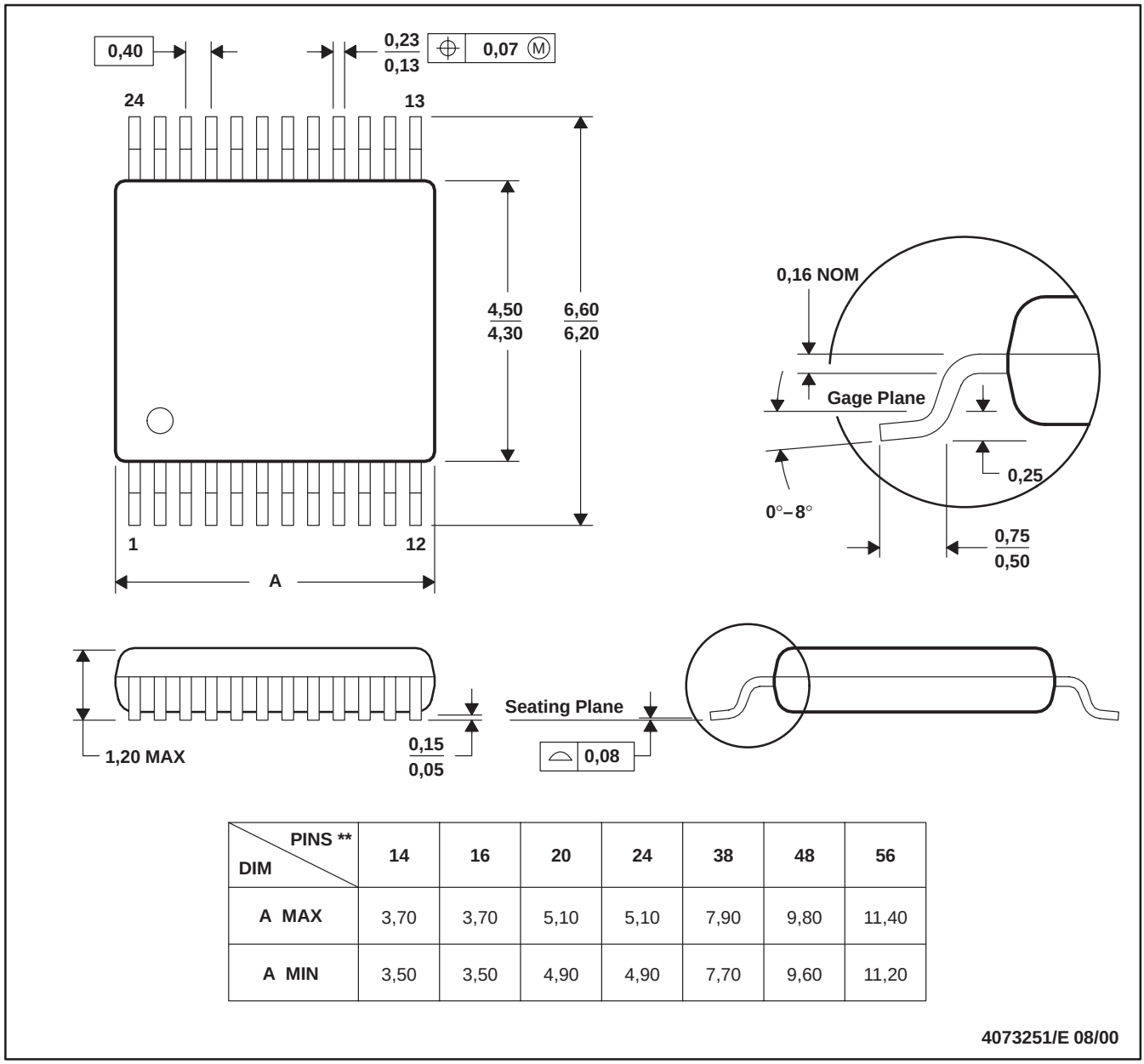

DIM \ PINS **	14	16	20	24	38	48	56
A MAX	3,70	3,70	5,10	5,10	7,90	9,80	11,40
A MIN	3,50	3,50	4,90	4,90	7,70	9,60	11,20

4073251/E 08/00

NOTES: A. All linear dimensions are in millimeters.
B. This drawing is subject to change without notice.
C. Body dimensions do not include mold flash or protrusion, not to exceed 0,15 per side.
D. Falls within JEDEC: 24/48 Pins – MO-153
14/16/20/56 Pins – MO-194

D (R–PDSO–G16) PLASTIC SMALL OUTLINE

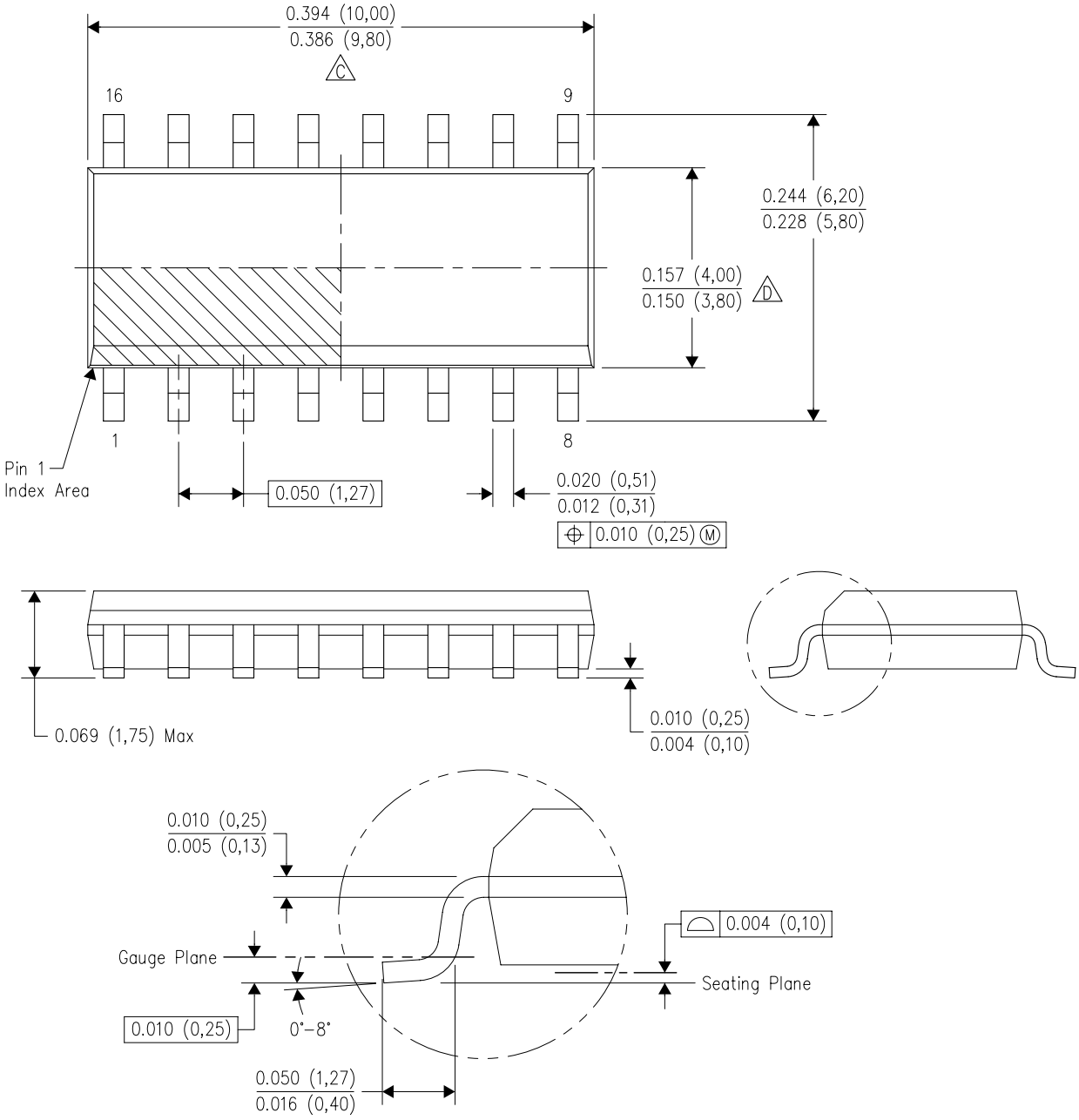

NOTES:
A. All linear dimensions are in inches (millimeters).
B. This drawing is subject to change without notice.
C. Body length does not include mold flash, protrusions, or gate burrs. Mold flash, protrusions, or gate burrs shall not exceed 0.006 (0,15) each side.
D. Body width does not include interlead flash. Interlead flash shall not exceed 0.017 (0,43) each side.
E. Reference JEDEC MS–012 variation AC.

D (R–PDSO–G16) PLASTIC SMALL OUTLINE

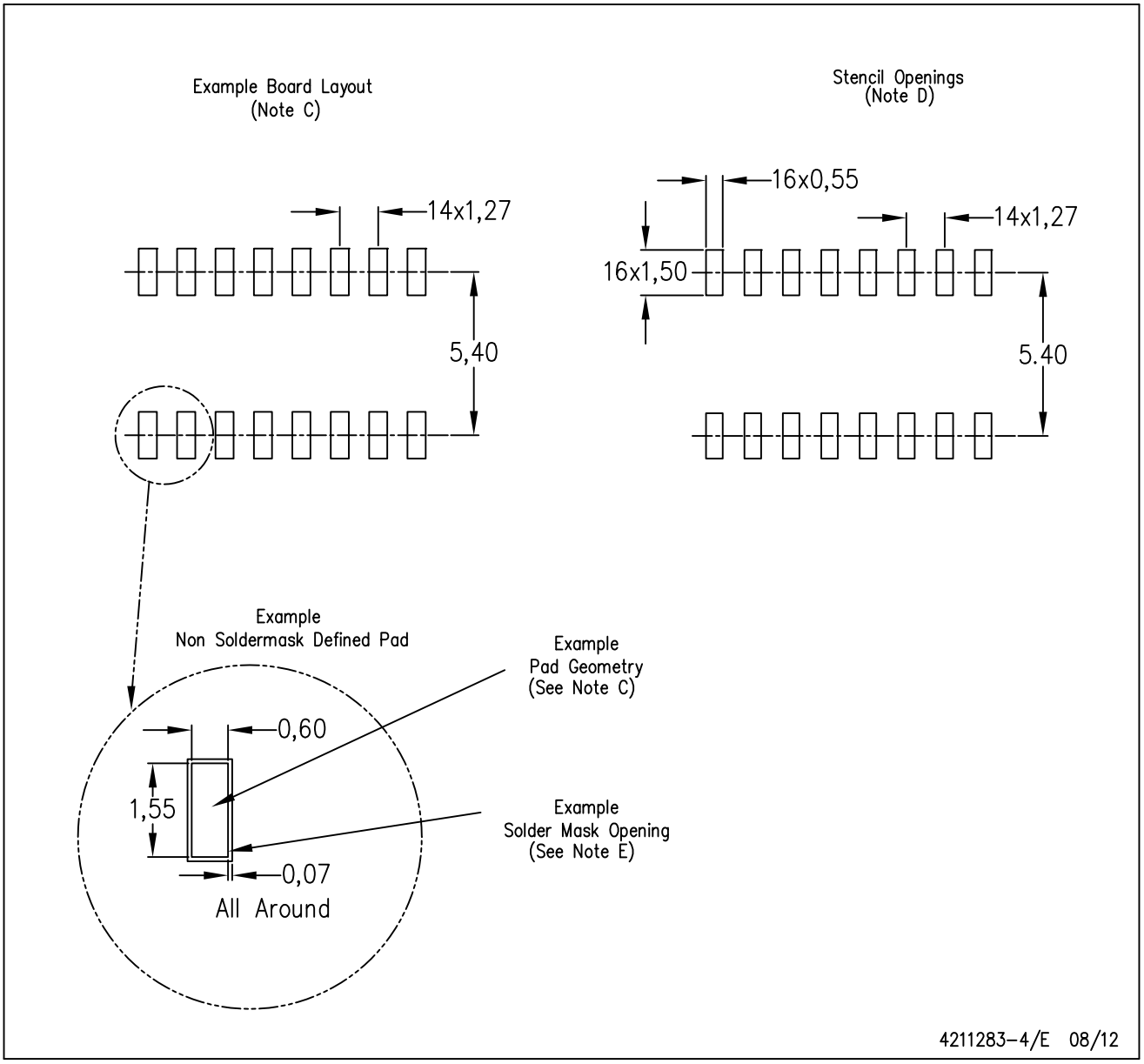

NOTES:
A. All linear dimensions are in millimeters.
B. This drawing is subject to change without notice.
C. Publication IPC–7351 is recommended for alternate designs.
D. Laser cutting apertures with trapezoidal walls and also rounding corners will offer better paste release. Customers should contact their board assembly site for stencil design recommendations. Refer to IPC–7525 for other stencil recommendations.
E. Customers should contact their board fabrication site for solder mask tolerances between and around signal pads.

PW (R–PDSO–G16) PLASTIC SMALL OUTLINE

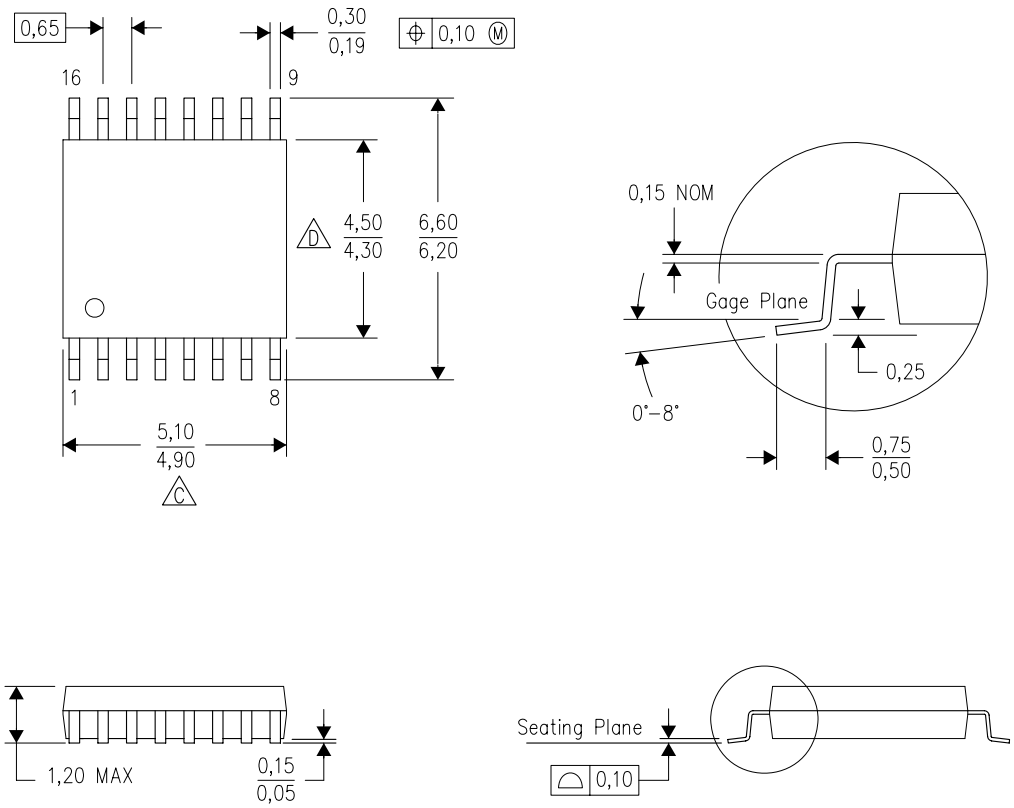

4040064–4/G 02/11

NOTES:
A. All linear dimensions are in millimeters. Dimensioning and tolerancing per ASME Y14.5M–1994.
B. This drawing is subject to change without notice.
C. Body length does not include mold flash, protrusions, or gate burrs. Mold flash, protrusions, or gate burrs shall not exceed 0,15 each side.
D. Body width does not include interlead flash. Interlead flash shall not exceed 0,25 each side.
E. Falls within JEDEC MO–153

PW (R–PDSO–G16) PLASTIC SMALL OUTLINE

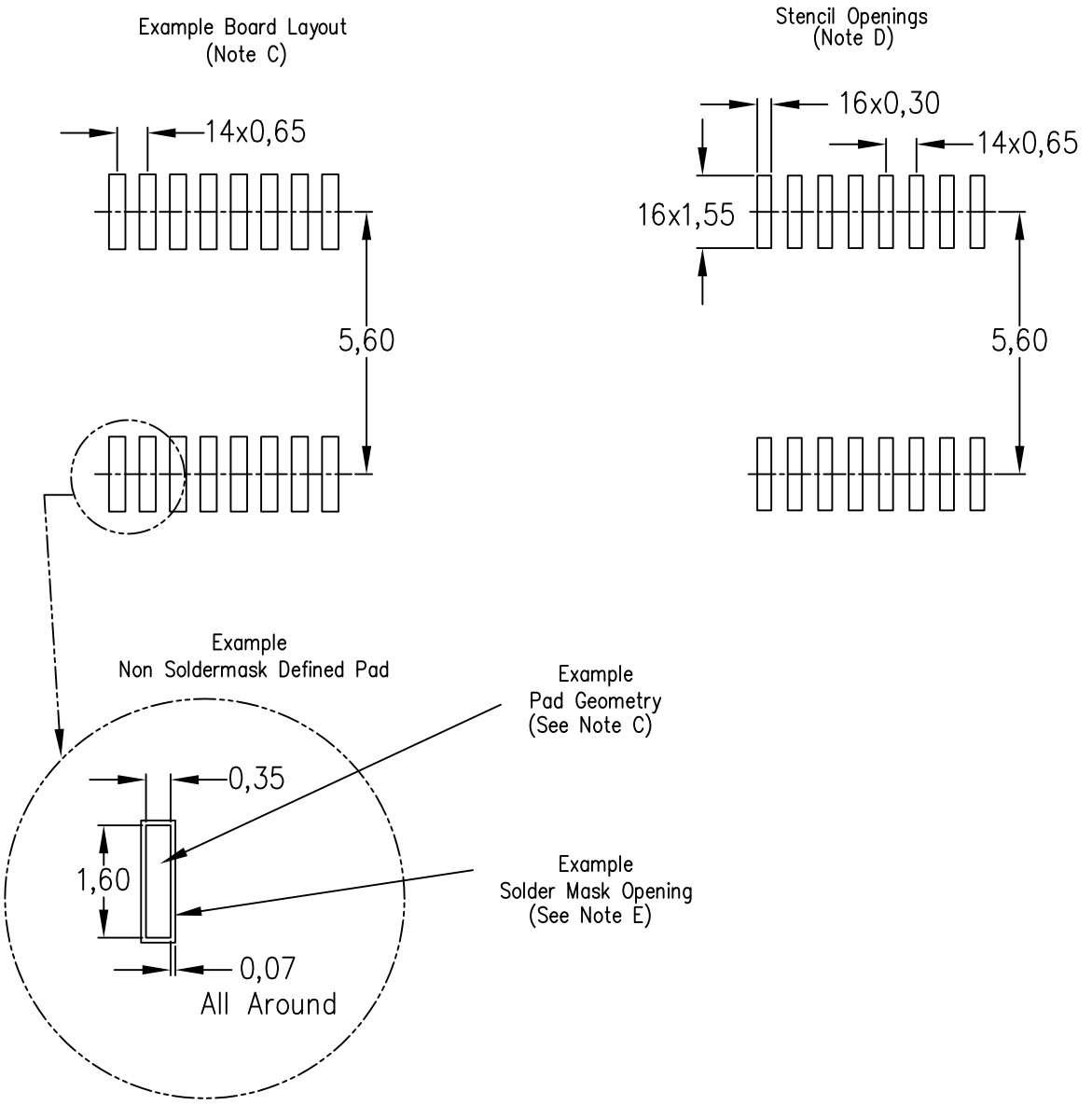

NOTES:
A. All linear dimensions are in millimeters.
B. This drawing is subject to change without notice.
C. Publication IPC–7351 is recommended for alternate designs.
D. Laser cutting apertures with trapezoidal walls and also rounding corners will offer better paste release. Customers should contact their board assembly site for stencil design recommendations. Refer to IPC–7525 for other stencil recommendations.
E. Customers should contact their board fabrication site for solder mask tolerances between and around signal pads.

IMPORTANT NOTICE

Texas Instruments Incorporated and its subsidiaries (TI) reserve the right to make corrections, enhancements, improvements and other changes to its semiconductor products and services per JESD46, latest issue, and to discontinue any product or service per JESD48, latest issue. Buyers should obtain the latest relevant information before placing orders and should verify that such information is current and complete. All semiconductor products (also referred to herein as “components”) are sold subject to TI’s terms and conditions of sale supplied at the time of order acknowledgment.

TI warrants performance of its components to the specifications applicable at the time of sale, in accordance with the warranty in TI’s terms and conditions of sale of semiconductor products. Testing and other quality control techniques are used to the extent TI deems necessary to support this warranty. Except where mandated by applicable law, testing of all parameters of each component is not necessarily performed.

TI assumes no liability for applications assistance or the design of Buyers’ products. Buyers are responsible for their products and applications using TI components. To minimize the risks associated with Buyers’ products and applications, Buyers should provide adequate design and operating safeguards.

TI does not warrant or represent that any license, either express or implied, is granted under any patent right, copyright, mask work right, or other intellectual property right relating to any combination, machine, or process in which TI components or services are used. Information published by TI regarding third-party products or services does not constitute a license to use such products or services or a warranty or endorsement thereof. Use of such information may require a license from a third party under the patents or other intellectual property of the third party, or a license from TI under the patents or other intellectual property of TI.

Reproduction of significant portions of TI information in TI data books or data sheets is permissible only if reproduction is without alteration and is accompanied by all associated warranties, conditions, limitations, and notices. TI is not responsible or liable for such altered documentation. Information of third parties may be subject to additional restrictions.

Resale of TI components or services with statements different from or beyond the parameters stated by TI for that component or service voids all express and any implied warranties for the associated TI component or service and is an unfair and deceptive business practice. TI is not responsible or liable for any such statements.

Buyer acknowledges and agrees that it is solely responsible for compliance with all legal, regulatory and safety-related requirements concerning its products, and any use of TI components in its applications, notwithstanding any applications-related information or support that may be provided by TI. Buyer represents and agrees that it has all the necessary expertise to create and implement safeguards which anticipate dangerous consequences of failures, monitor failures and their consequences, lessen the likelihood of failures that might cause harm and take appropriate remedial actions. Buyer will fully indemnify TI and its representatives against any damages arising out of the use of any TI components in safety-critical applications.

In some cases, TI components may be promoted specifically to facilitate safety-related applications. With such components, TI’s goal is to help enable customers to design and create their own end-product solutions that meet applicable functional safety standards and requirements. Nonetheless, such components are subject to these terms.

No TI components are authorized for use in FDA Class III (or similar life-critical medical equipment) unless authorized officers of the parties have executed a special agreement specifically governing such use.

Only those TI components which TI has specifically designated as military grade or “enhanced plastic” are designed and intended for use in military/aerospace applications or environments. Buyer acknowledges and agrees that any military or aerospace use of TI components which have ***not*** been so designated is solely at the Buyer's risk, and that Buyer is solely responsible for compliance with all legal and regulatory requirements in connection with such use.

TI has specifically designated certain components as meeting ISO/TS16949 requirements, mainly for automotive use. In any case of use of non-designated products, TI will not be responsible for any failure to meet ISO/TS16949.

Products		**Applications**	
Audio	www.ti.com/audio	Automotive and Transportation	www.ti.com/automotive
Amplifiers	amplifier.ti.com	Communications and Telecom	www.ti.com/communications
Data Converters	dataconverter.ti.com	Computers and Peripherals	www.ti.com/computers
DLP® Products	www.dlp.com	Consumer Electronics	www.ti.com/consumer-apps
DSP	dsp.ti.com	Energy and Lighting	www.ti.com/energy
Clocks and Timers	www.ti.com/clocks	Industrial	www.ti.com/industrial
Interface	interface.ti.com	Medical	www.ti.com/medical
Logic	logic.ti.com	Security	www.ti.com/security
Power Mgmt	power.ti.com	Space, Avionics and Defense	www.ti.com/space-avionics-defense
Microcontrollers	microcontroller.ti.com	Video and Imaging	www.ti.com/video
RFID	www.ti-rfid.com		
OMAP Applications Processors	www.ti.com/omap	**TI E2E Community**	e2e.ti.com
Wireless Connectivity	www.ti.com/wirelessconnectivity		

Mailing Address: Texas Instruments, Post Office Box 655303, Dallas, Texas 75265
Copyright © 2014, Texas Instruments Incorporated