CD54HC195, CD74HC195

Data sheet acquired from Harris Semiconductor
SCHS165E

September 1997 - Revised October 2003

High-Speed CMOS Logic 4-Bit Parallel Access Register

Features

- **Asynchronous Master Reset**
- **J, $\overline{K}$, (D) Inputs to First Stage**
- **Fully Synchronous Serial or Parallel Data Transfer**
- **Shift Right and Parallel Load Capability**
- **Complementary Output From Last Stage**
- **Buffered Inputs**
- **Typical f_{MAX} = 50MHz at V_{CC} = 5V, C_L = 15pF, T_A = 25^oC**
- **Fanout (Over Temperature Range)**
  - **Standard Outputs . . . . . 10 LSTTL Loads**
  - **Bus Driver Outputs . . . . . 15 LSTTL Loads**
- **Wide Operating Temperature Range . . . -55^oC to 125^oC**
- **Balanced Propagation Delay and Transition Times**
- **Significant Power Reduction Compared to LSTTL Logic ICs**
- **HC Types**
  - **2V to 6V Operation**
  - **High Noise Immunity: N_{IL} = 30%, N_{IH} = 30%of V_{CC} at V_{CC} = 5V**

Pinout

CD54HC195
(CERDIP)
CD74HC195
(PDIP, SOIC, SOP, TSSOP)
TOP VIEW

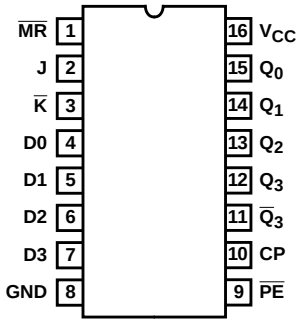

Description

The device is useful in a wide variety of shifting, counting and storage applications. It performs serial, parallel, serial to parallel, or parallel to serial data transfers at very high speeds.

The two modes of operation, shift right (Q_0-Q_1) and parallel load, are controlled by the state of the Parallel Enable ($\overline{PE}$) input. Serial data enters the first flip-flop (Q_0) via the J and $\overline{K}$ inputs when the $\overline{PE}$ input is high, and is shifted one bit in the direction Q_0-Q_1-Q_2-Q_3 following each Low to High clock transition. The J and $\overline{K}$ inputs provide the flexibility of the JK-type input for special applications and by tying the two pins together, the simple D-type input for general applications. The device appears as four common-clocked D flip-flops when the $\overline{PE}$ input is Low. After the Low to High clock transition, data on the parallel inputs (D0-D3) is transferred to the respective Q_0-Q_3 outputs. Shift left operation (Q_3-Q_2) can be achieved by tying the Q_n outputs to the Dn-1 inputs and holding the $\overline{PE}$ input low.

All parallel and serial data transfers are synchronous, occurring after each Low to High clock transition. The 'HC195 series utilizes edge triggering; therefore, there is no restriction on the activity of the J, $\overline{K}$, Pn and $\overline{PE}$ inputs for logic operations, other than set-up and hold time requirements. A Low on the asynchronous Master Reset ($\overline{MR}$) input sets all Q outputs Low, independent of any other input condition.

Ordering Information

PART NUMBER	TEMP. RANGE (^oC)	PACKAGE
CD54HC195F3A	-55 to 125	16 Ld CERDIP
CD74HC195E	-55 to 125	16 Ld PDIP
CD74HC195M	-55 to 125	16 Ld SOIC
CD74HC195NSR	-55 to 125	16 Ld SOP
CD74HC195PW	-55 to 125	16 Ld TSSOP
CD74HC195PWR	-55 to 125	16 Ld TSSOP
CD74HC195PWT	-55 to 125	16 Ld TSSOP

NOTE: When ordering, use the entire part number. The suffix R denotes tape and reel. The suffix T denotes a small-quantity reel of 250.

CAUTION: These devices are sensitive to electrostatic discharge. Users should follow proper IC Handling Procedures.

Copyright © 2003, Texas Instruments Incorporated

Functional Diagram

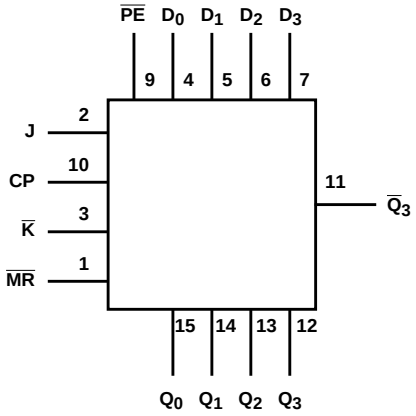

TRUTH TABLE

OPERATING MODES	INPUTS						OUTPUT				
	$\overline{MR}$	CP	$\overline{PE}$	J	$\overline{K}$	Dn	Q_0	Q_1	Q_2	Q_3	$\overline{Q_3}$
Asynchronous Reset	L	X	X	X	X	X	L	L	L	L	H
Shift, Set First Stage	H	↑	h	h	h	X	H	q_0	q_1	q_2	$\overline{q}_2$
Shift, Reset First Stage	H	↑	h	l	l	X	L	q_0	q_1	q_2	$\overline{q}_2$
Shift, Toggle First Stage	H	↑	h	h	l	X	$\overline{q}_0$	q_0	q_1	q_2	$\overline{q}_2$
Shift, Retain First Stage	H	↑	h	l	h	X	q_0	q_0	q_1	q_2	$\overline{q}_2$
Parallel Load	H	↑	l	X	X	dn	d_0	d_1	d_2	d3	$\overline{d2}$

H = High Voltage Level
L = Low Voltage Level,
X = Don't Care
↑ = Transition from Low to High Level
l = Low Voltage Level One Set-up Time Prior to the Low to High Clock Transition
h = Low Voltage Level One Set-up Time prior to the High to Low Clock Transition,
dn (q_n) = Lower Case Letters Indicate the State of the Referenced Input (or output) One Set-up Time Prior to the Low to High Clock Transition.

Absolute Maximum Ratings

DC Supply Voltage, V_{CC} . . . . . -0.5V to 7V
DC Input Diode Current, I_{IK}
For V_I < -0.5V or V_I > V_{CC} + 0.5V . . . . . ±20mA
DC Output Diode Current, I_{OK}
For V_O < -0.5V or V_O > V_{CC} + 0.5V . . . . . ±20mA
DC Output Source or Sink Current per Output Pin, I_O
For V_O > -0.5V or V_O < V_{CC} + 0.5V . . . . . ±25mA
DC V_{CC} or Ground Current, I_{CC} or I_{GND} . . . . . ±50mA

Operating Conditions

Temperature Range (T_A) . . . . . -55°C to 125°C
Supply Voltage Range, V_{CC}
HC Types . . . . . 2V to 6V
HCT Types . . . . . 4.5V to 5.5V
DC Input or Output Voltage, V_I, V_O . . . . . 0V to V_{CC}
Input Rise and Fall Time
2V . . . . . 1000ns (Max)
4.5V. . . . . 500ns (Max)
6V . . . . . 400ns (Max)

Thermal Information

Package Thermal Impedance, θ_{JA} (see Note 1):
E (PDIP) Package . . . . . 67°C/W
M (SOIC) Package. . . . . 73°C/W
NS (SOP) Package . . . . . 64°C/W
PW (TSSOP) Package . . . . . 108°C/W
Maximum Junction Temperature . . . . . 150°C
Maximum Storage Temperature Range . . . . . -65°C to 150°C
Maximum Lead Temperature (Soldering 10s) . . . . . 300°C
(SOIC - Lead Tips Only)

CAUTION: Stresses above those listed in "Absolute Maximum Ratings" may cause permanent damage to the device. This is a stress only rating and operation of the device at these or any other conditions above those indicated in the operational sections of this specification is not implied.

NOTE:

1. The package thermal impedance is calculated in accordance with JESD 51-7.

DC Electrical Specifications

PARAMETER	SYMBOL	TEST CONDITIONS		V_{CC} (V)	25°C			-40°C TO 85°C		-55°C TO 125°C		UNITS
		V_I (V)	I_O (mA)		MIN	TYP	MAX	MIN	MAX	MIN	MAX	
High Level Input Voltage	V_{IH}	-	-	2	1.5	-	-	1.5	-	1.5	-	V
				4.5	3.15	-	-	3.15	-	3.15	-	V
				6	4.2	-	-	4.2	-	4.2	-	V
Low Level Input Voltage	V_{IL}	-	-	2	-	-	0.5	-	0.5	-	0.5	V
				4.5	-	-	1.35	-	1.35	-	1.35	V
				6	-	-	1.8	-	1.8	-	1.8	V
High Level Output Voltage CMOS Loads	V_{OH}	V_{IH} or V_{IL}	-0.02	2	1.9	-	-	1.9	-	1.9	-	V
			-0.02	4.5	4.4	-	-	4.4	-	4.4	-	V
			-0.02	6	5.9	-	-	5.9	-	5.9	-	V
High Level Output Voltage TTL Loads			-	-	-	-	-	-	-	-	-	V
			-4	4.5	3.98	-	-	3.84	-	3.7	-	V
			-5.2	6	5.48	-	-	5.34	-	5.2	-	V
Low Level Output Voltage CMOS Loads	V_{OL}	V_{IH} or V_{IL}	0.02	2	-	-	0.1	-	0.1	-	0.1	V
			0.02	4.5	-	-	0.1	-	0.1	-	0.1	V
			0.02	6	-	-	0.1	-	0.1	-	0.1	V
Low Level Output Voltage TTL Loads			-	-	-	-	-	-	-	-	-	V
			4	4.5	-	-	0.26	-	0.33	-	0.4	V
			5.2	6	-	-	0.26	-	0.33	-	0.4	V
Input Leakage Current	I_I	V_{CC} or GND	-	6	-	-	±0.1	-	±1	-	±1	µA
Quiescent Device Current	I_{CC}	V_{CC} or GND	0	6	-	-	8	-	80	-	160	µA

Prerequisite For Switching Function

PARAMETER	SYMBOL	TEST CONDITIONS	V_{CC} (V)	25°C		-40°C TO 85°C		-55°C TO 125°C		UNITS
				MIN	MAX	MIN	MAX	MIN	MAX	
Clock Frequency	f_{MAX}	-	2	6	-	5	-	4	-	MHz
			4.5	30	-	25	-	20	-	MHz
			6	35	-	29	-	23	-	MHz
$\overline{MR}$ Pulse Width	t_W	-	2	80	-	100	-	120	-	ns
			4.5	16	-	20	-	24	-	ns
			6	14	-	17	-	20	-	ns
Clock Pulse Width	t_W	-	2	80	-	100	-	120	-	ns
			4.5	16	-	20	-	24	-	ns
			6	14	-	17	-	20	-	ns
Set-up Time J, $\overline{K}$, $\overline{PE}$ to Clock	t_{SU}	-	2	100	-	125	-	150	-	ns
			4.5	20	-	25	-	30	-	ns
			6	17	-	21	-	26	-	ns
Hold Time J, $\overline{K}$, $\overline{PE}$ to Clock	t_H	-	2	3	-	3	-	3	-	ns
			4.5	3	-	3	-	3	-	ns
			6	5	-	3	-	3	-	ns
Removal Time, $\overline{MR}$ to Clock	t_{REM}	-	2	80	-	100	-	120	-	ns
			4.5	16	-	20	-	24	-	ns
			6	14	-	17	-	20	-	ns

Switching Specifications Input t_r, t_f = 6ns

PARAMETER	SYMBOL	TEST CONDITIONS	V_{CC} (V)	25°C		-40°C TO 85°C	-55°C TO 125°C	UNITS
				TYP	MAX	MAX	MAX	
HC TYPES								
Propagation Delay, CP to Output	t_{PLH}, t_{PHL}	C_L = 50pF	2	-	175	220	265	ns
			4.5	-	35	44	53	ns
			6	-	30	37	45	ns
Propagation Delay, $\overline{MR}$ toOutput	t_{PLH}, t_{PHL}	C_L = 50pF	2	-	150	190	225	ns
			4.5	-	30	38	45	ns
			6	-	26	33	38	ns
Output Transition Times (Figure 1)	t_{TLH}, t_{THL}	C_L = 50pF	2	-	75	95	110	ns
			4.5	-	15	19	22	ns
			6	-	13	16	19	ns
Input Capacitance	C_{IN}	-	-	-	10	10	10	pF
CP to Q_n Propagation Delay	t_{PLH}, t_{PHL}	C_L = 15pF	5	14	-	-	-	ns
$\overline{MR}$ to Q_n	t_{PHL}	C_L = 15pF	5	13	-	-	-	ns
Maximum Clock Frequency	f_{MAX}	C_L = 15pF	5	50	-	-	-	MHz
Power Dissipation Capacitance (Notes 2, 3)	C_{PD}	C_L = 15pF		45	-	-	-	pF

NOTES:

2. C_{PD} is used to determine the dynamic power consumption, per flip-flop.
3. $P_D = V_{CC}^2 f_i + \Sigma (C_L V_{CC}^2 + f_O)$ where f_i = Input Frequency, f_O = Output Frequency, C_L = Output Load Capacitance, V_{CC} = Supply Voltage.

Test Circuit and Waveforms

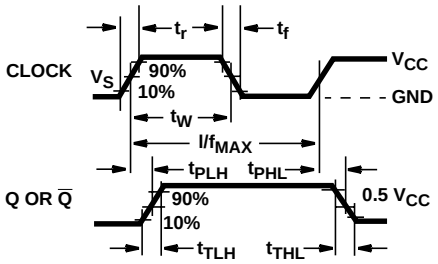

FIGURE 1. CLOCK PREREQUISITE AND PROPAGATION DELAYS AND OUTPUT TRANSITION TIMES

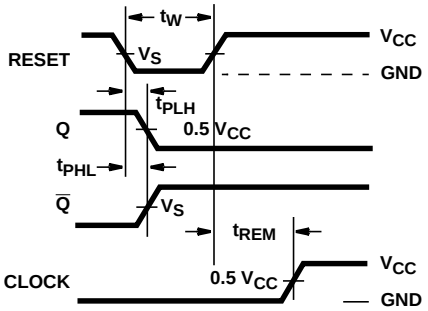

FIGURE 2. MASTER RESET PREREQUISITE AND PROPAGATION DELAYS

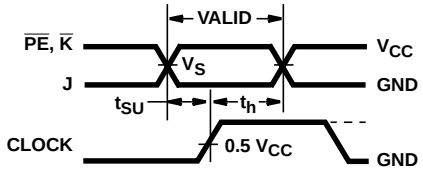

FIGURE 3. J, $\overline{K}$, OR PARALLEL ENABLE PREREQUISITE TIMES

PACKAGING INFORMATION

Orderable Device	Status (1)	Package Type	Package Drawing	Pins	Package Qty	Eco Plan (2)	Lead/Ball Finish (6)	MSL Peak Temp (3)	Op Temp (°C)	Device Marking (4/5)	Samples
CD74HC195E	ACTIVE	PDIP	N	16	25	Pb-Free (RoHS)	CU NIPDAU	N / A for Pkg Type	-55 to 125	CD74HC195E	Samples
CD74HC195EE4	ACTIVE	PDIP	N	16	25	Pb-Free (RoHS)	CU NIPDAU	N / A for Pkg Type	-55 to 125	CD74HC195E	Samples
CD74HC195M	ACTIVE	SOIC	D	16	40	Green (RoHS & no Sb/Br)	CU NIPDAU	Level-1-260C-UNLIM	-55 to 125	HC195M	Samples
CD74HC195M96	ACTIVE	SOIC	D	16	2500	Green (RoHS & no Sb/Br)	CU NIPDAU	Level-1-260C-UNLIM	-55 to 125	HC195M	Samples
CD74HC195M96G4	ACTIVE	SOIC	D	16	2500	Green (RoHS & no Sb/Br)	CU NIPDAU	Level-1-260C-UNLIM	-55 to 125	HC195M	Samples
CD74HC195MG4	ACTIVE	SOIC	D	16	40	Green (RoHS & no Sb/Br)	CU NIPDAU	Level-1-260C-UNLIM	-55 to 125	HC195M	Samples
CD74HC195NSR	ACTIVE	SO	NS	16	2000	Green (RoHS & no Sb/Br)	CU NIPDAU	Level-1-260C-UNLIM	-55 to 125	HC195M	Samples
CD74HC195PW	ACTIVE	TSSOP	PW	16	90	Green (RoHS & no Sb/Br)	CU NIPDAU	Level-1-260C-UNLIM	-55 to 125	HJ195	Samples
CD74HC195PWG4	ACTIVE	TSSOP	PW	16	90	Green (RoHS & no Sb/Br)	CU NIPDAU	Level-1-260C-UNLIM	-55 to 125	HJ195	Samples
CD74HC195PWR	ACTIVE	TSSOP	PW	16	2000	Green (RoHS & no Sb/Br)	CU NIPDAU	Level-1-260C-UNLIM	-55 to 125	HJ195	Samples

(1) The marketing status values are defined as follows:
ACTIVE: Product device recommended for new designs.
LIFEBUY: TI has announced that the device will be discontinued, and a lifetime-buy period is in effect.
NRND: Not recommended for new designs. Device is in production to support existing customers, but TI does not recommend using this part in a new design.
PREVIEW: Device has been announced but is not in production. Samples may or may not be available.
OBSOLETE: TI has discontinued the production of the device.

(2) Eco Plan - The planned eco-friendly classification: Pb-Free (RoHS), Pb-Free (RoHS Exempt), or Green (RoHS & no Sb/Br) - please check http://www.ti.com/productcontent for the latest availability information and additional product content details.
TBD: The Pb-Free/Green conversion plan has not been defined.
Pb-Free (RoHS): TI's terms "Lead-Free" or "Pb-Free" mean semiconductor products that are compatible with the current RoHS requirements for all 6 substances, including the requirement that lead not exceed 0.1% by weight in homogeneous materials. Where designed to be soldered at high temperatures, TI Pb-Free products are suitable for use in specified lead-free processes.
Pb-Free (RoHS Exempt): This component has a RoHS exemption for either 1) lead-based flip-chip solder bumps used between the die and package, or 2) lead-based die adhesive used between the die and leadframe. The component is otherwise considered Pb-Free (RoHS compatible) as defined above.
Green (RoHS & no Sb/Br): TI defines "Green" to mean Pb-Free (RoHS compatible), and free of Bromine (Br) and Antimony (Sb) based flame retardants (Br or Sb do not exceed 0.1% by weight in homogeneous material)

(3) MSL, Peak Temp. - The Moisture Sensitivity Level rating according to the JEDEC industry standard classifications, and peak solder temperature.

(4) There may be additional marking, which relates to the logo, the lot trace code information, or the environmental category on the device.

(5) Multiple Device Markings will be inside parentheses. Only one Device Marking contained in parentheses and separated by a "~" will appear on a device. If a line is indented then it is a continuation of the previous line and the two combined represent the entire Device Marking for that device.

(6) Lead/Ball Finish - Orderable Devices may have multiple material finish options. Finish options are separated by a vertical ruled line. Lead/Ball Finish values may wrap to two lines if the finish value exceeds the maximum column width.

Important Information and Disclaimer: The information provided on this page represents TI's knowledge and belief as of the date that it is provided. TI bases its knowledge and belief on information provided by third parties, and makes no representation or warranty as to the accuracy of such information. Efforts are underway to better integrate information from third parties. TI has taken and continues to take reasonable steps to provide representative and accurate information but may not have conducted destructive testing or chemical analysis on incoming materials and chemicals. TI and TI suppliers consider certain information to be proprietary, and thus CAS numbers and other limited information may not be available for release.

In no event shall TI's liability arising out of such information exceed the total purchase price of the TI part(s) at issue in this document sold by TI to Customer on an annual basis.

TAPE AND REEL INFORMATION

REEL DIMENSIONS

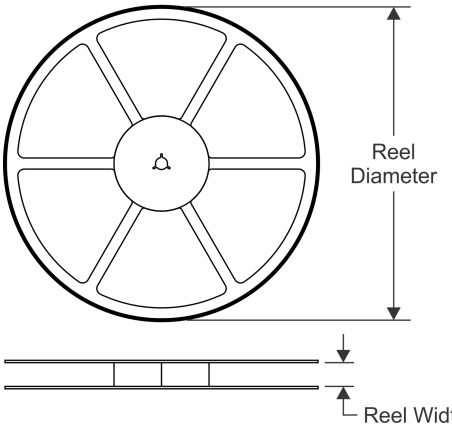

TAPE DIMENSIONS

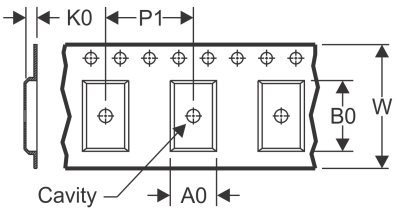

A0	Dimension designed to accommodate the component width
B0	Dimension designed to accommodate the component length
K0	Dimension designed to accommodate the component thickness
W	Overall width of the carrier tape
P1	Pitch between successive cavity centers

QUADRANT ASSIGNMENTS FOR PIN 1 ORIENTATION IN TAPE

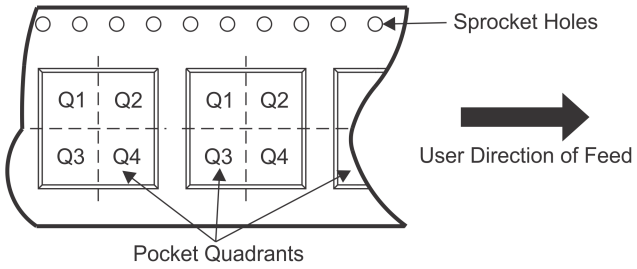

*All dimensions are nominal

Device	Package Type	Package Drawing	Pins	SPQ	Reel Diameter (mm)	Reel Width W1 (mm)	A0 (mm)	B0 (mm)	K0 (mm)	P1 (mm)	W (mm)	Pin1 Quadrant
CD74HC195M96	SOIC	D	16	2500	330.0	16.4	6.5	10.3	2.1	8.0	16.0	Q1
CD74HC195NSR	SO	NS	16	2000	330.0	16.4	8.2	10.5	2.5	12.0	16.0	Q1
CD74HC195PWR	TSSOP	PW	16	2000	330.0	12.4	6.9	5.6	1.6	8.0	12.0	Q1

TAPE AND REEL BOX DIMENSIONS

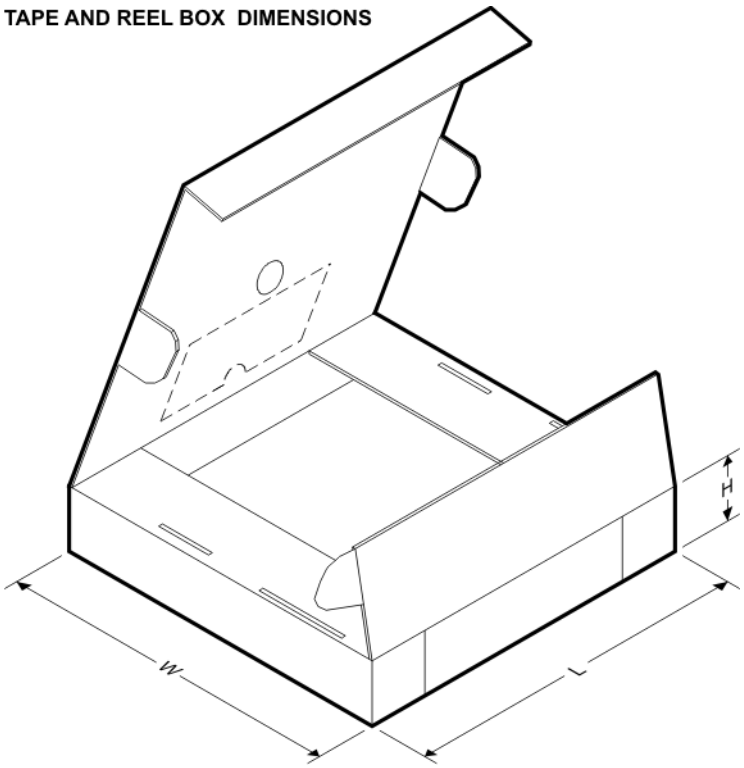

*All dimensions are nominal

Device	Package Type	Package Drawing	Pins	SPQ	Length (mm)	Width (mm)	Height (mm)
CD74HC195M96	SOIC	D	16	2500	333.2	345.9	28.6
CD74HC195NSR	SO	NS	16	2000	367.0	367.0	38.0
CD74HC195PWR	TSSOP	PW	16	2000	367.0	367.0	35.0

N (R–PDIP–T**)

PLASTIC DUAL–IN–LINE PACKAGE

16 PINS SHOWN

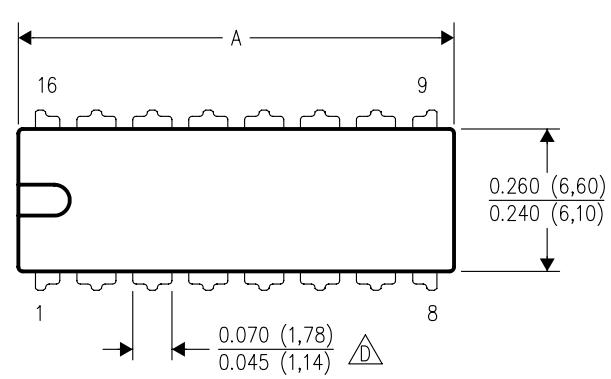

DIM \ PINS **	14	16	18	20
A MAX	0.775 (19,69)	0.775 (19,69)	0.920 (23,37)	1.060 (26,92)
A MIN	0.745 (18,92)	0.745 (18,92)	0.850 (21,59)	0.940 (23,88)
MS–001 VARIATION (C)	AA	BB	AC	AD

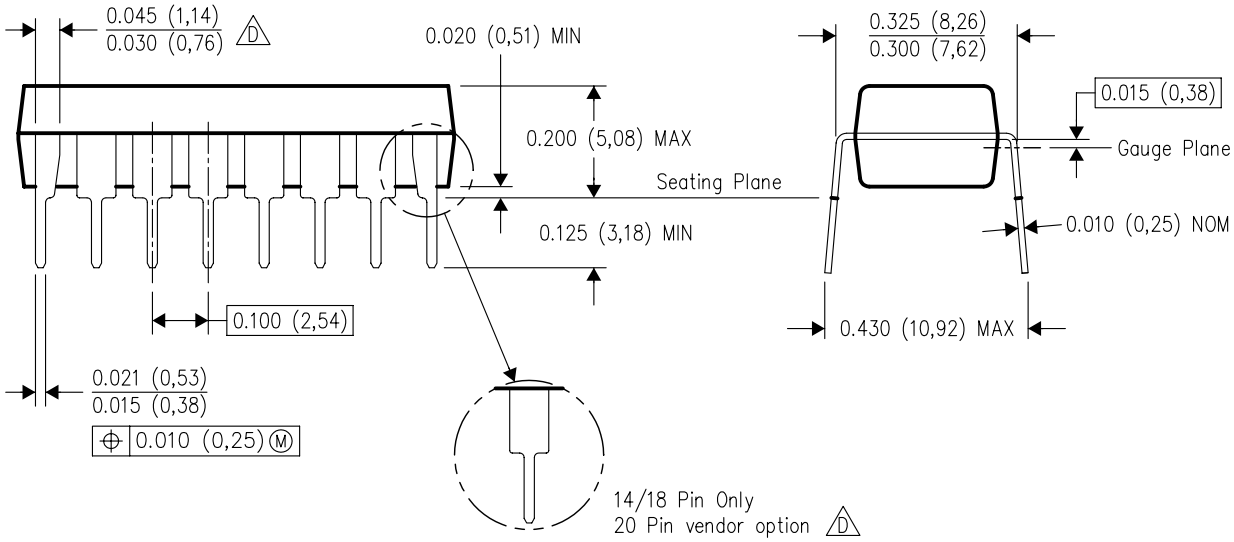

4040049/E 12/2002

NOTES:
A. All linear dimensions are in inches (millimeters).
B. This drawing is subject to change without notice.
C. Falls within JEDEC MS–001, except 18 and 20 pin minimum body length (Dim A).
D. The 20 pin end lead shoulder width is a vendor option, either half or full width.

D (R–PDSO–G16) PLASTIC SMALL OUTLINE

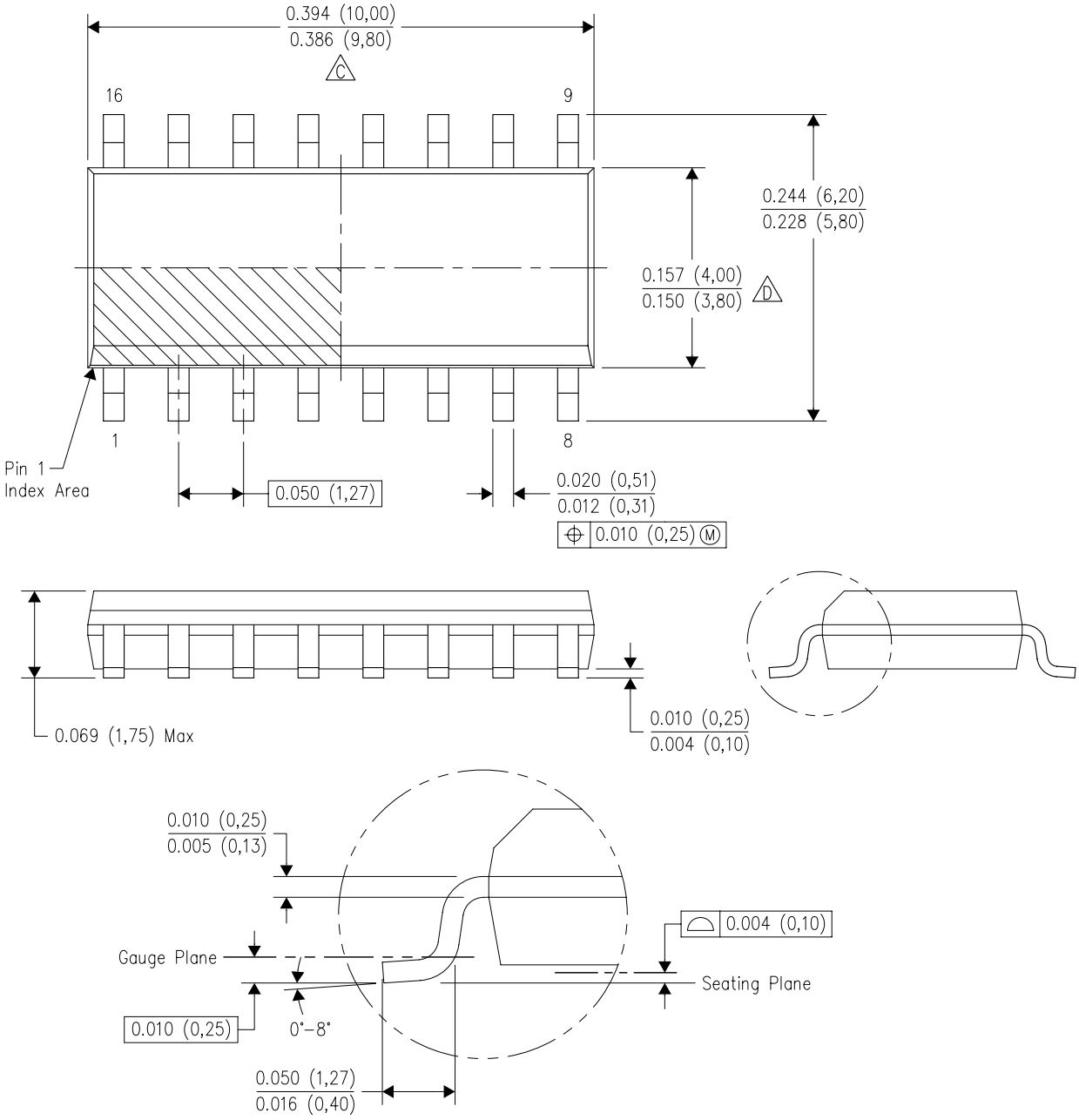

NOTES:
A. All linear dimensions are in inches (millimeters).
B. This drawing is subject to change without notice.
C. Body length does not include mold flash, protrusions, or gate burrs. Mold flash, protrusions, or gate burrs shall not exceed 0.006 (0,15) each side.
D. Body width does not include interlead flash. Interlead flash shall not exceed 0.017 (0,43) each side.
E. Reference JEDEC MS–012 variation AC.

D (R–PDSO–G16) PLASTIC SMALL OUTLINE

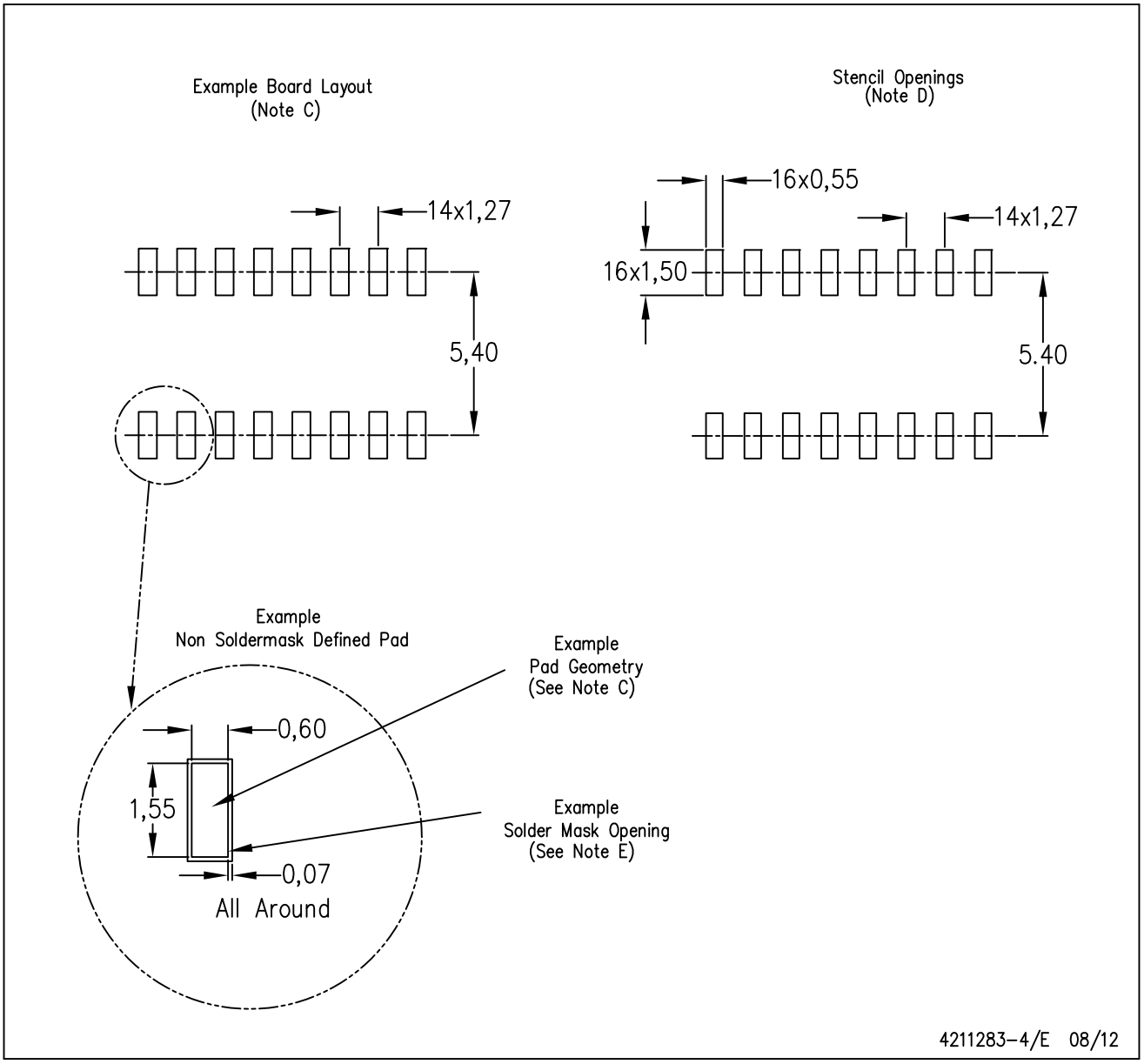

NOTES:
A. All linear dimensions are in millimeters.
B. This drawing is subject to change without notice.
C. Publication IPC–7351 is recommended for alternate designs.
D. Laser cutting apertures with trapezoidal walls and also rounding corners will offer better paste release. Customers should contact their board assembly site for stencil design recommendations. Refer to IPC–7525 for other stencil recommendations.
E. Customers should contact their board fabrication site for solder mask tolerances between and around signal pads.

PW (R–PDSO–G16) PLASTIC SMALL OUTLINE

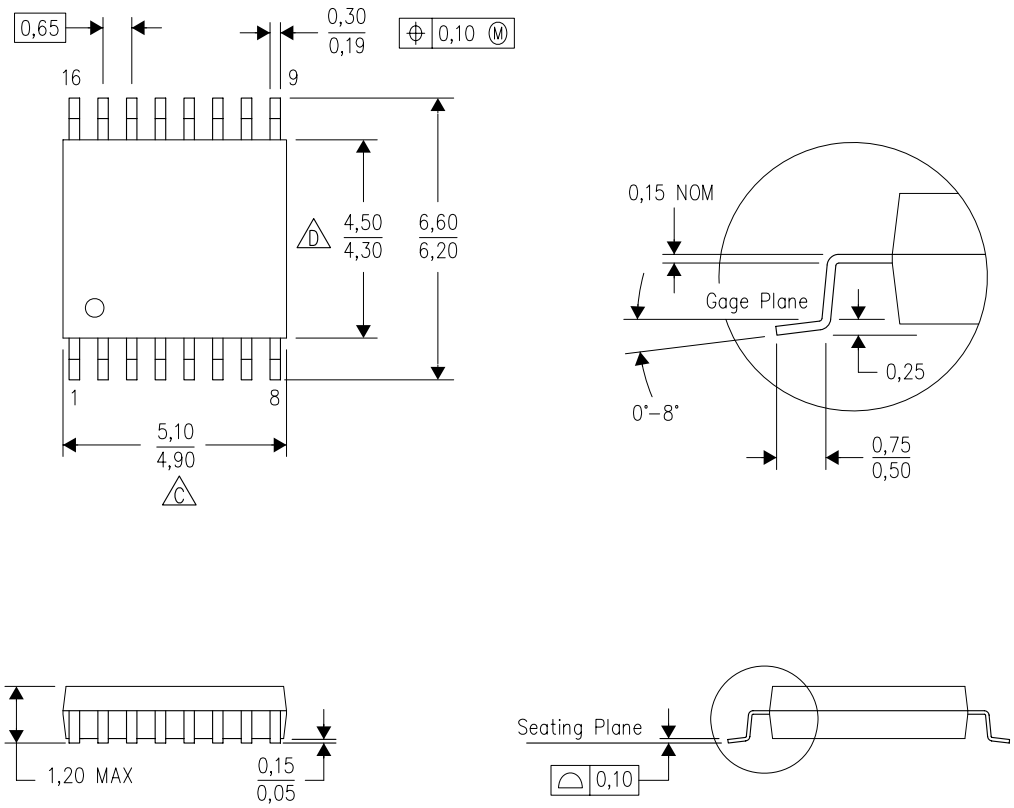

4040064–4/G 02/11

NOTES:
A. All linear dimensions are in millimeters. Dimensioning and tolerancing per ASME Y14.5M–1994.
B. This drawing is subject to change without notice.
C. Body length does not include mold flash, protrusions, or gate burrs. Mold flash, protrusions, or gate burrs shall not exceed 0,15 each side.
D. Body width does not include interlead flash. Interlead flash shall not exceed 0,25 each side.
E. Falls within JEDEC MO–153

PW (R–PDSO–G16) PLASTIC SMALL OUTLINE

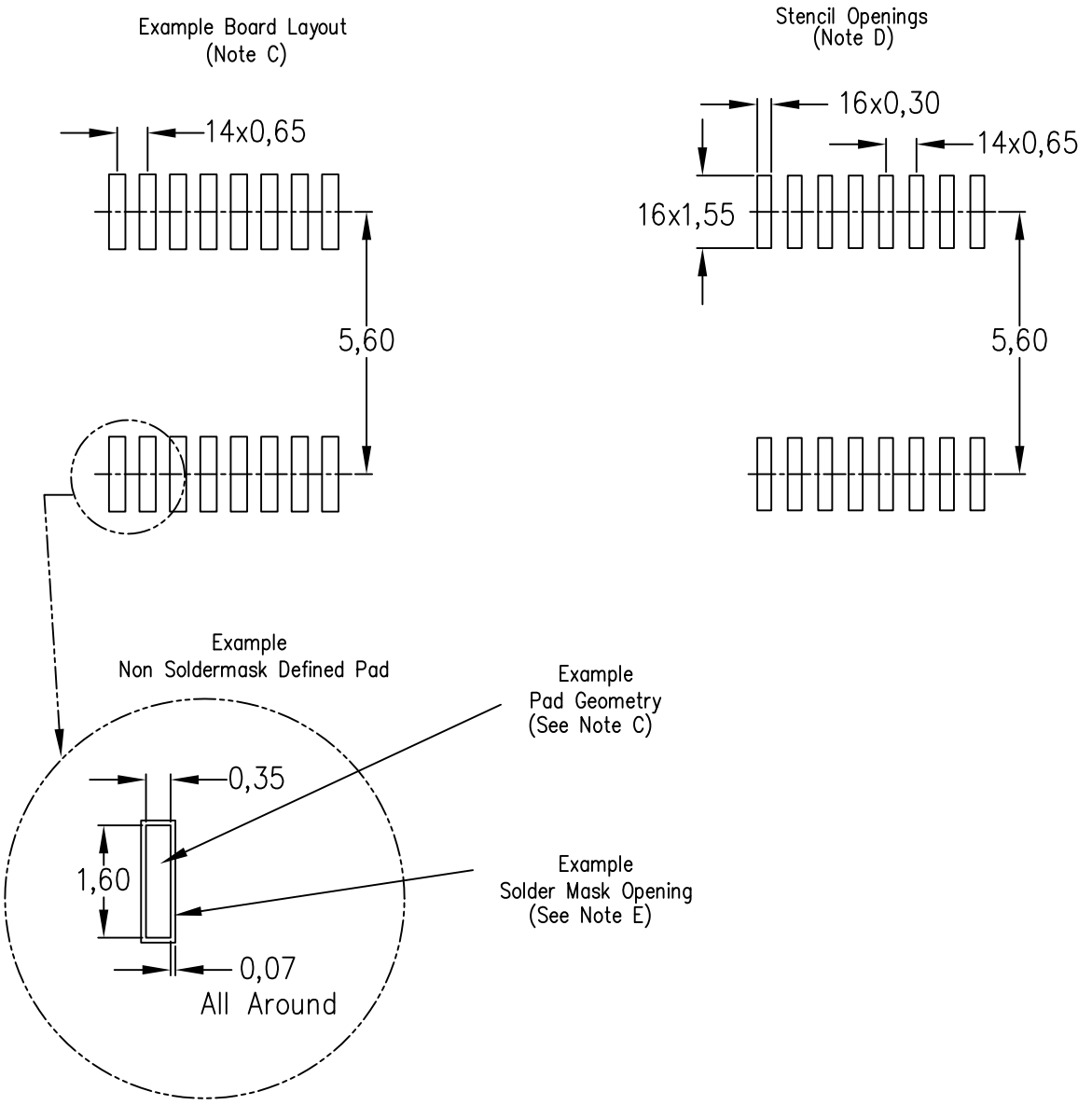

NOTES:
A. All linear dimensions are in millimeters.
B. This drawing is subject to change without notice.
C. Publication IPC–7351 is recommended for alternate designs.
D. Laser cutting apertures with trapezoidal walls and also rounding corners will offer better paste release. Customers should contact their board assembly site for stencil design recommendations. Refer to IPC–7525 for other stencil recommendations.
E. Customers should contact their board fabrication site for solder mask tolerances between and around signal pads.

MECHANICAL DATA

NS (R-PDSO-G)** **PLASTIC SMALL-OUTLINE PACKAGE**

14-PINS SHOWN

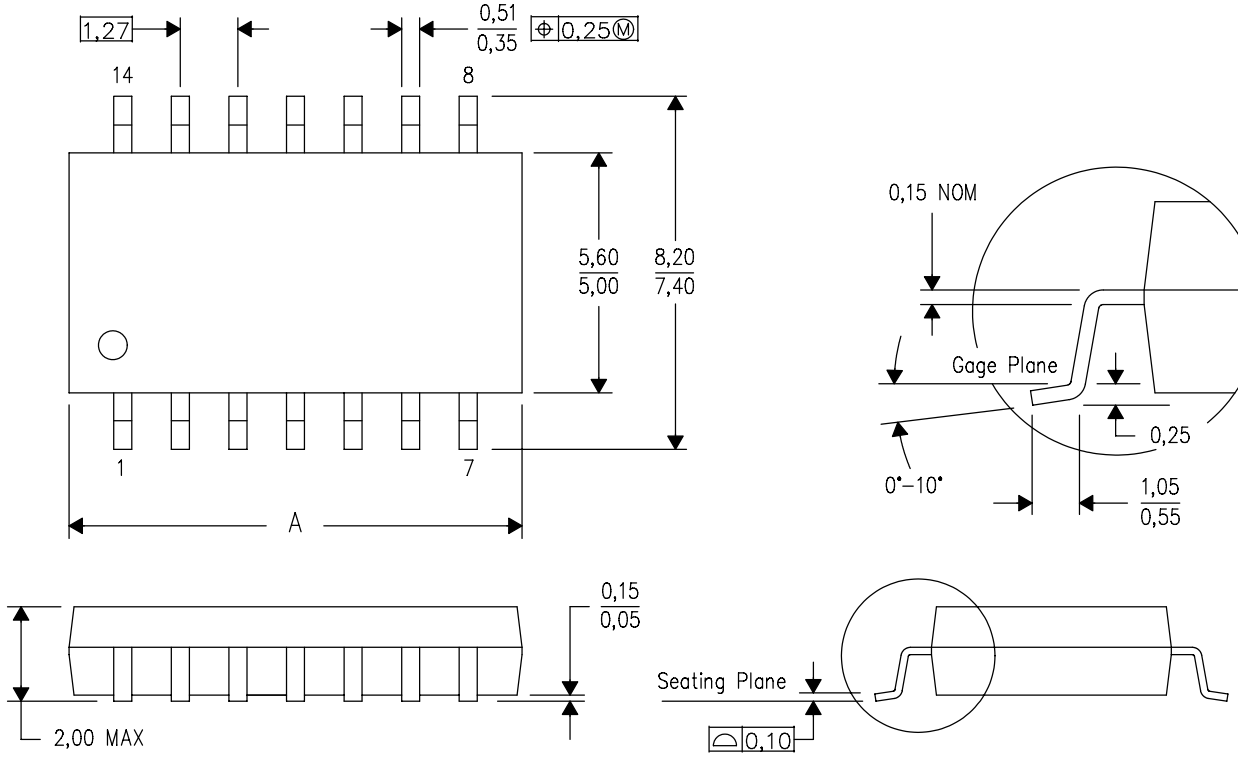

DIM \ PINS **	14	16	20	24
A MAX	10,50	10,50	12,90	15,30
A MIN	9,90	9,90	12,30	14,70

4040062/C 03/03

NOTES:
A. All linear dimensions are in millimeters.
B. This drawing is subject to change without notice.
C. Body dimensions do not include mold flash or protrusion, not to exceed 0,15.

IMPORTANT NOTICE

Texas Instruments Incorporated and its subsidiaries (TI) reserve the right to make corrections, enhancements, improvements and other changes to its semiconductor products and services per JESD46, latest issue, and to discontinue any product or service per JESD48, latest issue. Buyers should obtain the latest relevant information before placing orders and should verify that such information is current and complete. All semiconductor products (also referred to herein as “components”) are sold subject to TI’s terms and conditions of sale supplied at the time of order acknowledgment.

TI warrants performance of its components to the specifications applicable at the time of sale, in accordance with the warranty in TI’s terms and conditions of sale of semiconductor products. Testing and other quality control techniques are used to the extent TI deems necessary to support this warranty. Except where mandated by applicable law, testing of all parameters of each component is not necessarily performed.

TI assumes no liability for applications assistance or the design of Buyers’ products. Buyers are responsible for their products and applications using TI components. To minimize the risks associated with Buyers’ products and applications, Buyers should provide adequate design and operating safeguards.

TI does not warrant or represent that any license, either express or implied, is granted under any patent right, copyright, mask work right, or other intellectual property right relating to any combination, machine, or process in which TI components or services are used. Information published by TI regarding third-party products or services does not constitute a license to use such products or services or a warranty or endorsement thereof. Use of such information may require a license from a third party under the patents or other intellectual property of the third party, or a license from TI under the patents or other intellectual property of TI.

Reproduction of significant portions of TI information in TI data books or data sheets is permissible only if reproduction is without alteration and is accompanied by all associated warranties, conditions, limitations, and notices. TI is not responsible or liable for such altered documentation. Information of third parties may be subject to additional restrictions.

Resale of TI components or services with statements different from or beyond the parameters stated by TI for that component or service voids all express and any implied warranties for the associated TI component or service and is an unfair and deceptive business practice. TI is not responsible or liable for any such statements.

Buyer acknowledges and agrees that it is solely responsible for compliance with all legal, regulatory and safety-related requirements concerning its products, and any use of TI components in its applications, notwithstanding any applications-related information or support that may be provided by TI. Buyer represents and agrees that it has all the necessary expertise to create and implement safeguards which anticipate dangerous consequences of failures, monitor failures and their consequences, lessen the likelihood of failures that might cause harm and take appropriate remedial actions. Buyer will fully indemnify TI and its representatives against any damages arising out of the use of any TI components in safety-critical applications.

In some cases, TI components may be promoted specifically to facilitate safety-related applications. With such components, TI’s goal is to help enable customers to design and create their own end-product solutions that meet applicable functional safety standards and requirements. Nonetheless, such components are subject to these terms.

No TI components are authorized for use in FDA Class III (or similar life-critical medical equipment) unless authorized officers of the parties have executed a special agreement specifically governing such use.

Only those TI components which TI has specifically designated as military grade or “enhanced plastic” are designed and intended for use in military/aerospace applications or environments. Buyer acknowledges and agrees that any military or aerospace use of TI components which have ***not*** been so designated is solely at the Buyer's risk, and that Buyer is solely responsible for compliance with all legal and regulatory requirements in connection with such use.

TI has specifically designated certain components as meeting ISO/TS16949 requirements, mainly for automotive use. In any case of use of non-designated products, TI will not be responsible for any failure to meet ISO/TS16949.

Products		**Applications**	
Audio	www.ti.com/audio	Automotive and Transportation	www.ti.com/automotive
Amplifiers	amplifier.ti.com	Communications and Telecom	www.ti.com/communications
Data Converters	dataconverter.ti.com	Computers and Peripherals	www.ti.com/computers
DLP® Products	www.dlp.com	Consumer Electronics	www.ti.com/consumer-apps
DSP	dsp.ti.com	Energy and Lighting	www.ti.com/energy
Clocks and Timers	www.ti.com/clocks	Industrial	www.ti.com/industrial
Interface	interface.ti.com	Medical	www.ti.com/medical
Logic	logic.ti.com	Security	www.ti.com/security
Power Mgmt	power.ti.com	Space, Avionics and Defense	www.ti.com/space-avionics-defense
Microcontrollers	microcontroller.ti.com	Video and Imaging	www.ti.com/video
RFID	www.ti-rfid.com		
OMAP Applications Processors	www.ti.com/omap	**TI E2E Community**	e2e.ti.com
Wireless Connectivity	www.ti.com/wirelessconnectivity		

Mailing Address: Texas Instruments, Post Office Box 655303, Dallas, Texas 75265
Copyright © 2014, Texas Instruments Incorporated