- **Flow-Through Architecture Optimizes PCB Layout**
- **Center-Pin V_{CC} and GND Configurations Minimize High-Speed Switching Noise**
- ***EPIC*™ (Enhanced-Performance Implanted CMOS) 1-μm Process**
- **500-mA Typical Latch-Up Immunity at 125°C**
- **Package Options Include Plastic Small-Outline (DW) and Shrink Small-Outline (DB) Packages, and Standard Plastic 300-mil DIPs (NT)**

DB, DW, OR NT PACKAGE
(TOP VIEW)

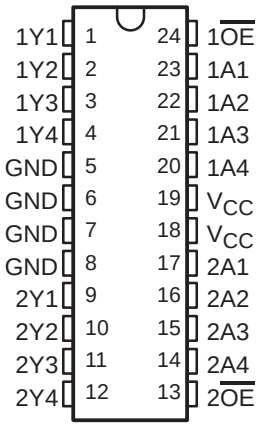

description

This octal buffer/line driver is designed specifically to improve both the performance and density of 3-state memory address drivers, clock drivers, and bus-oriented receivers and transmitters. This device provides inverting outputs and symmetrical active-low output-enable ($\overline{OE}$) inputs. This device features high fan-out and improved fan-in.

The 74AC11240 is organized as two 4-bit buffers/line drivers with separate $\overline{OE}$ inputs. When $\overline{OE}$ is low, the device passes inverted data from the A inputs to the Y outputs. When $\overline{OE}$ is high, the outputs are in the high-impedance state.

The 74AC11240 is characterized for operation from –40°C to 85°C.

FUNCTION TABLE
(each buffer)

INPUTS		OUTPUT
$\overline{OE}$	A	Y
L	H	L
L	L	H
H	X	Z

logic symbol†

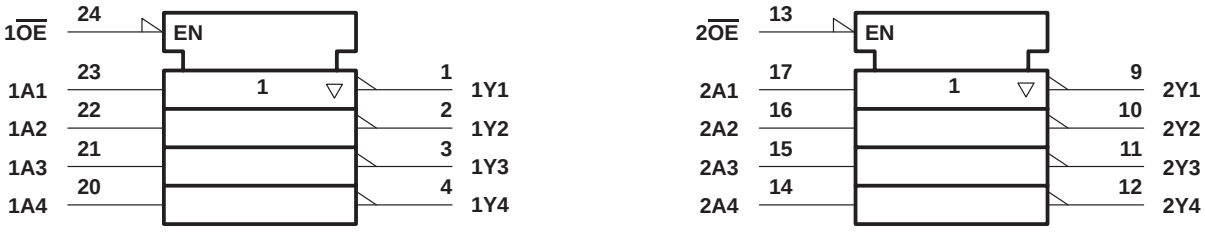

† This symbol is in accordance with ANSI/IEEE Std 91-1984 and IEC Publication 617-12.

Please be aware that an important notice concerning availability, standard warranty, and use in critical applications of Texas Instruments semiconductor products and disclaimers thereto appears at the end of this data sheet.

EPIC is a trademark of Texas Instruments Incorporated.

PRODUCTION DATA information is current as of publication date. Products conform to specifications per the terms of Texas Instruments standard warranty. Production processing does not necessarily include testing of all parameters.

Copyright © 1996, Texas Instruments Incorporated

logic diagram (positive logic)

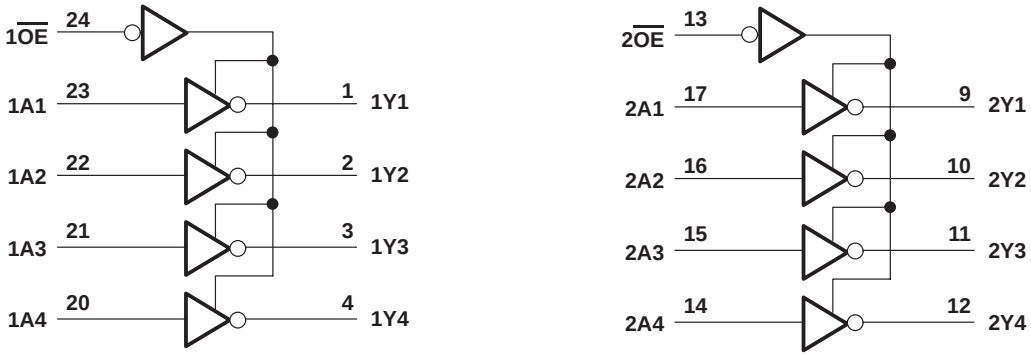

absolute maximum ratings over operating free-air temperature range (unless otherwise noted)†

Supply voltage range, V_{CC} . . . . . –0.5 V to 6 V
Input voltage range, V_I (see Note 1) . . . . . –0.5 V to V_{CC} + 0.5 V
Output voltage range, V_O (see Note 1) . . . . . –0.5 V to V_{CC} + 0.5 V
Input clamp current, I_{IK} (V_I < 0 or V_I > V_{CC}) . . . . . ±20 mA
Output clamp current, I_{OK} (V_O < 0 or V_O > V_{CC}) . . . . . ±50 mA
Continuous output current, I_O (V_O = 0 to V_{CC}) . . . . . ±50 mA
Continuous current through V_{CC} or GND . . . . . ±200 mA
Maximum power dissipation at T_A = 55°C (in still air) (see Note 2): DB package . . . . . 0.65 W
DW package . . . . . 1.7 W
NT package . . . . . 1.3 W
Storage temperature range, T_{stg} . . . . . –65°C to 150°C

† Stresses beyond those listed under “absolute maximum ratings” may cause permanent damage to the device. These are stress ratings only, and functional operation of the device at these or any other conditions beyond those indicated under “recommended operating conditions” is not implied. Exposure to absolute-maximum-rated conditions for extended periods may affect device reliability.

NOTES: 1. The input and output voltage ratings may be exceeded if the input and output current ratings are observed.
2. The maximum package power dissipation is calculated using a junction temperature of 150°C and a board trace length of 750 mils, except for the NT package, which has a trace length of zero.

recommended operating conditions

			MIN	NOM	MAX	UNIT
V_{CC}	Supply voltage		3	5	5.5	V
V_{IH}	High-level input voltage	V_{CC} = 3 V	2.1			V
		V_{CC} = 4.5 V	3.15			
		V_{CC} = 5.5 V	3.85			
V_{IL}	Low-level input voltage	V_{CC} = 3 V			0.9	V
		V_{CC} = 4.5 V			1.35	
		V_{CC} = 5.5 V			1.65	
V_I	Input voltage		0		V_{CC}	V
V_O	Output voltage		0		V_{CC}	V
I_{OH}	High-level output current	V_{CC} = 3 V			–4	mA
		V_{CC} = 4.5 V			–24	
		V_{CC} = 5.5 V			–24	
I_{OL}	Low-level output current	V_{CC} = 3 V			12	mA
		V_{CC} = 4.5 V			24	
		V_{CC} = 5.5 V			24	
$\Delta t/\Delta v$	Input transition rise or fall rate	$\overline{OE}$	0		5	ns/V
		Data	0		10	
T_A	Operating free-air temperature		–40		85	°C

electrical characteristics over recommended operating free-air temperature range (unless otherwise noted)

PARAMETER	TEST CONDITIONS	V_{CC}	T_A = 25°C			MIN	MAX	UNIT
			MIN	TYP	MAX			
V_{OH}	I_{OH} = –50 μA	3 V	2.9			2.9		V
		4.5 V	4.4			4.4		
		5.5 V	5.4			5.4		
	I_{OH} = –4 mA	3 V	2.58			2.48		
	I_{OH} = –24 mA	4.5 V	3.94			3.8		
		5.5 V	4.94			4.8		
	I_{OH} = –75 mA†	5.5 V				3.85		
V_{OL}	I_{OL} = 50 μA	3 V			0.1		0.1	V
		4.5 V			0.1		0.1	
		5.5 V			0.1		0.1	
	I_{OL} = 12 mA	3 V			0.36		0.44	
	I_{OL} = 24 mA	4.5 V			0.36		0.44	
		5.5 V			0.36		0.44	
	I_{OL} = 75 mA†	5.5 V					1.65	
I_{OZ}	V_O = V_{CC} or GND	5.5 V			±0.5		±5	μA
I_I	V_I = V_{CC} or GND	5.5 V			±0.1		±1	μA
I_{CC}	V_I = V_{CC} or GND, I_O = 0	5.5 V			8		80	μA
C_i	V_I = V_{CC} or GND	5 V		4				pF
C_O	V_O = V_{CC} or GND	5 V		10				pF

† Not more than one output should be tested at a time, and the duration of the test should not exceed 10 ms.

switching characteristics over recommended operating free-air temperature range, V_{CC} = 3.3 V ± 0.3 V (unless otherwise noted) (see Figure 1)

PARAMETER	FROM (INPUT)	TO (OUTPUT)	T_A = 25°C			MIN	MAX	UNIT
			MIN	TYP	MAX			
t_{PLH}	A	Y	1.5	7.6	10.5	1.5	11.7	ns
t_{PHL}			1.5	6.3	8.6	1.5	9.5	
t_{PZH}	$\overline{OE}$	Y	1.5	8.2	11.6	1.5	12.7	ns
t_{PZL}			1.5	7.6	10.8	1.5	12	
t_{PHZ}	$\overline{OE}$	Y	1.5	5.5	7.5	1.5	7.8	ns
t_{PLZ}			1.5	6.7	9.4	1.5	9.8	

switching characteristics over recommended operating free-air temperature range, V_{CC} = 5 V ± 0.5 V (unless otherwise noted) (see Figure 1)

PARAMETER	FROM (INPUT)	TO (OUTPUT)	T_A = 25°C			MIN	MAX	UNIT
			MIN	TYP	MAX			
t_{PLH}	A	Y	1.5	5.4	7.5	1.5	8.4	ns
t_{PHL}			1.5	4.6	6.6	1.5	7.2	
t_{PZH}	$\overline{OE}$	Y	1.5	5.7	8.2	1.5	9.2	ns
t_{PZL}			1.5	5.3	7.7	1.5	8.7	
t_{PHZ}	$\overline{OE}$	Y	1.5	4.7	6.3	1.5	6.6	ns
t_{PLZ}			1.5	5.2	7.3	1.5	7.7	

operating characteristics, V_{CC} = 5 V, T_A = 25°C

PARAMETER			TEST CONDITIONS		TYP	UNIT
C_{pd}	Power dissipation capacitance per buffer	Outputs enabled	C_L = 50 pF,	f = 1 MHz	39	pF
		Outputs disabled			12	

PARAMETER MEASUREMENT INFORMATION

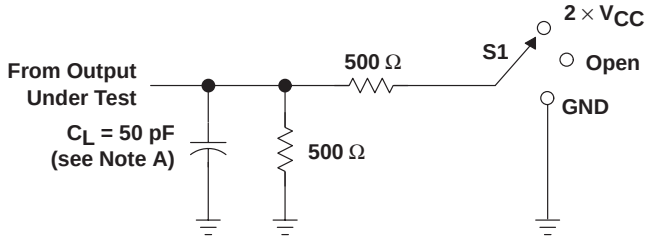

TEST	S1
t_{PLH}/t_{PHL}	Open
t_{PLZ}/t_{PZL}	2 × V_{CC}
t_{PHZ}/t_{PZH}	GND

LOAD CIRCUIT

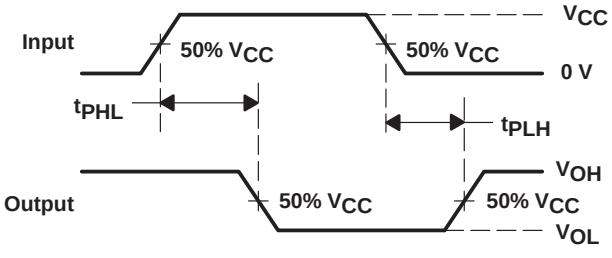

VOLTAGE WAVEFORMS

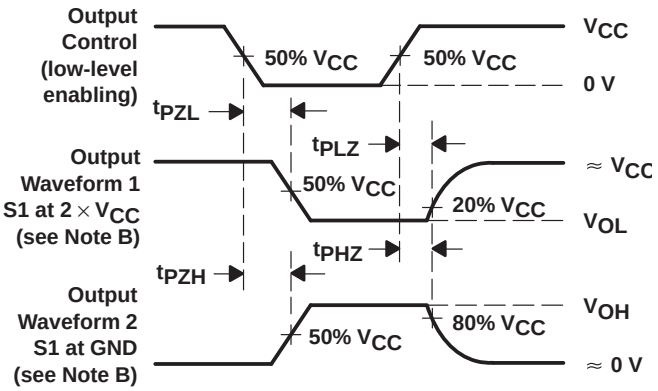

VOLTAGE WAVEFORMS

NOTES: A. C_L includes probe and jig capacitance.
B. Waveform 1 is for an output with internal conditions such that the output is low except when disabled by the output control. Waveform 2 is for an output with internal conditions such that the output is high except when disabled by the output control.
C. All input pulses are supplied by generators having the following characteristics: PRR ≤ 1 MHz, Z_O = 50 Ω, t_r = 3 ns, t_f = 3 ns.
D. The outputs are measured one at a time with one input transition per measurement.

Figure 1. Load Circuit and Voltage Waveforms

PACKAGING INFORMATION

Orderable Device	Status (1)	Package Type	Package Drawing	Pins	Package Qty	Eco Plan (2)	Lead/Ball Finish (6)	MSL Peak Temp (3)	Op Temp (°C)	Device Marking (4/5)	Samples
74AC11240DBLE	OBSOLETE	SSOP	DB	24		TBD	Call TI	Call TI	-40 to 85		
74AC11240DBR	ACTIVE	SSOP	DB	24	2000	Green (RoHS & no Sb/Br)	CU NIPDAU	Level-1-260C-UNLIM	-40 to 85	AE240	Samples
74AC11240DBRG4	ACTIVE	SSOP	DB	24	2000	Green (RoHS & no Sb/Br)	CU NIPDAU	Level-1-260C-UNLIM	-40 to 85	AE240	Samples
74AC11240DW	ACTIVE	SOIC	DW	24	25	Green (RoHS & no Sb/Br)	CU NIPDAU	Level-1-260C-UNLIM	-40 to 85	AC11240	Samples
74AC11240PW	ACTIVE	TSSOP	PW	24	60	Green (RoHS & no Sb/Br)	CU NIPDAU	Level-1-260C-UNLIM	-40 to 85	AE240	Samples

(1) The marketing status values are defined as follows:
ACTIVE: Product device recommended for new designs.
LIFEBUY: TI has announced that the device will be discontinued, and a lifetime-buy period is in effect.
NRND: Not recommended for new designs. Device is in production to support existing customers, but TI does not recommend using this part in a new design.
PREVIEW: Device has been announced but is not in production. Samples may or may not be available.
OBSOLETE: TI has discontinued the production of the device.

(2) Eco Plan - The planned eco-friendly classification: Pb-Free (RoHS), Pb-Free (RoHS Exempt), or Green (RoHS & no Sb/Br) - please check http://www.ti.com/productcontent for the latest availability information and additional product content details.
TBD: The Pb-Free/Green conversion plan has not been defined.
Pb-Free (RoHS): TI's terms "Lead-Free" or "Pb-Free" mean semiconductor products that are compatible with the current RoHS requirements for all 6 substances, including the requirement that lead not exceed 0.1% by weight in homogeneous materials. Where designed to be soldered at high temperatures, TI Pb-Free products are suitable for use in specified lead-free processes.
Pb-Free (RoHS Exempt): This component has a RoHS exemption for either 1) lead-based flip-chip solder bumps used between the die and package, or 2) lead-based die adhesive used between the die and leadframe. The component is otherwise considered Pb-Free (RoHS compatible) as defined above.
Green (RoHS & no Sb/Br): TI defines "Green" to mean Pb-Free (RoHS compatible), and free of Bromine (Br) and Antimony (Sb) based flame retardants (Br or Sb do not exceed 0.1% by weight in homogeneous material)

(3) MSL, Peak Temp. - The Moisture Sensitivity Level rating according to the JEDEC industry standard classifications, and peak solder temperature.

(4) There may be additional marking, which relates to the logo, the lot trace code information, or the environmental category on the device.

(5) Multiple Device Markings will be inside parentheses. Only one Device Marking contained in parentheses and separated by a "~" will appear on a device. If a line is indented then it is a continuation of the previous line and the two combined represent the entire Device Marking for that device.

(6) Lead/Ball Finish - Orderable Devices may have multiple material finish options. Finish options are separated by a vertical ruled line. Lead/Ball Finish values may wrap to two lines if the finish value exceeds the maximum column width.

Important Information and Disclaimer: The information provided on this page represents TI's knowledge and belief as of the date that it is provided. TI bases its knowledge and belief on information provided by third parties, and makes no representation or warranty as to the accuracy of such information. Efforts are underway to better integrate information from third parties. TI has taken and continues to take reasonable steps to provide representative and accurate information but may not have conducted destructive testing or chemical analysis on incoming materials and chemicals. TI and TI suppliers consider certain information to be proprietary, and thus CAS numbers and other limited information may not be available for release.

In no event shall TI's liability arising out of such information exceed the total purchase price of the TI part(s) at issue in this document sold by TI to Customer on an annual basis.

TAPE AND REEL INFORMATION

REEL DIMENSIONS

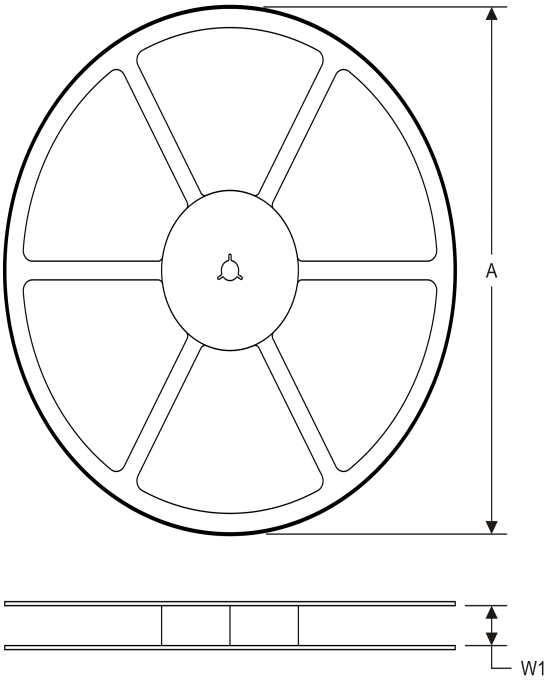

TAPE DIMENSIONS

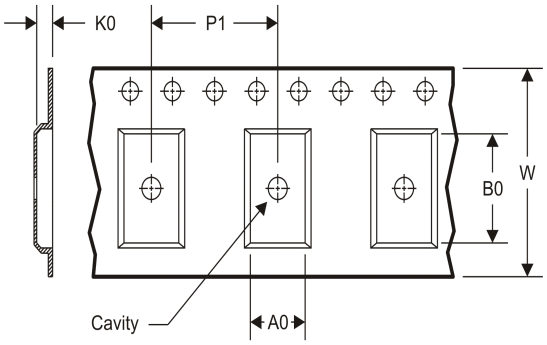

A0	Dimension designed to accommodate the component width
B0	Dimension designed to accommodate the component length
K0	Dimension designed to accommodate the component thickness
W	Overall width of the carrier tape
P1	Pitch between successive cavity centers

TAPE AND REEL INFORMATION

*All dimensions are nominal

Device	Package Type	Package Drawing	Pins	SPQ	Reel Diameter (mm)	Reel Width W1 (mm)	A0 (mm)	B0 (mm)	K0 (mm)	P1 (mm)	W (mm)	Pin1 Quadrant
74AC11240DBR	SSOP	DB	24	2000	330.0	16.4	8.2	8.8	2.5	12.0	16.0	Q1

TAPE AND REEL BOX DIMENSIONS

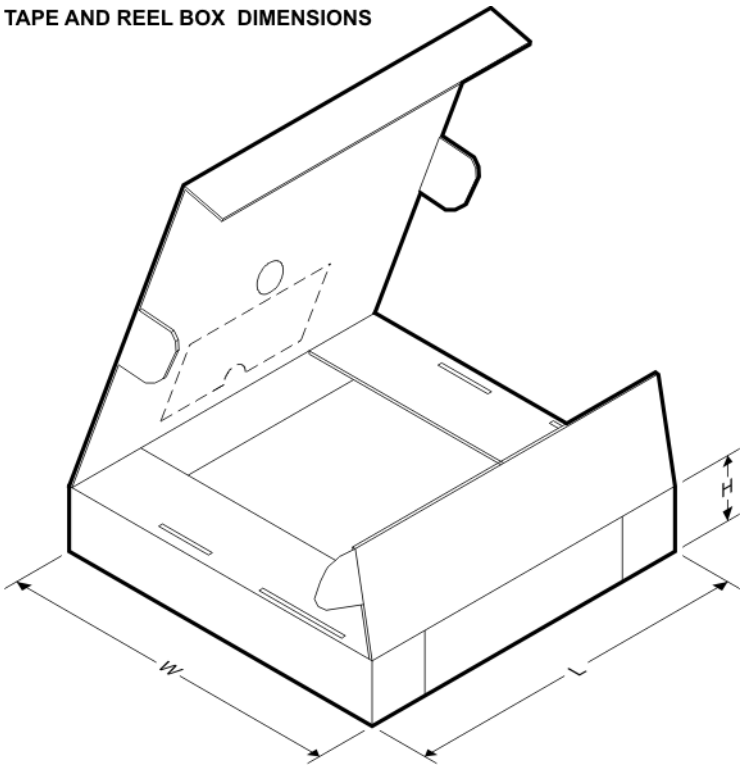

*All dimensions are nominal

Device	Package Type	Package Drawing	Pins	SPQ	Length (mm)	Width (mm)	Height (mm)
74AC11240DBR	SSOP	DB	24	2000	367.0	367.0	38.0

DW (R–PDSO–G24) PLASTIC SMALL OUTLINE

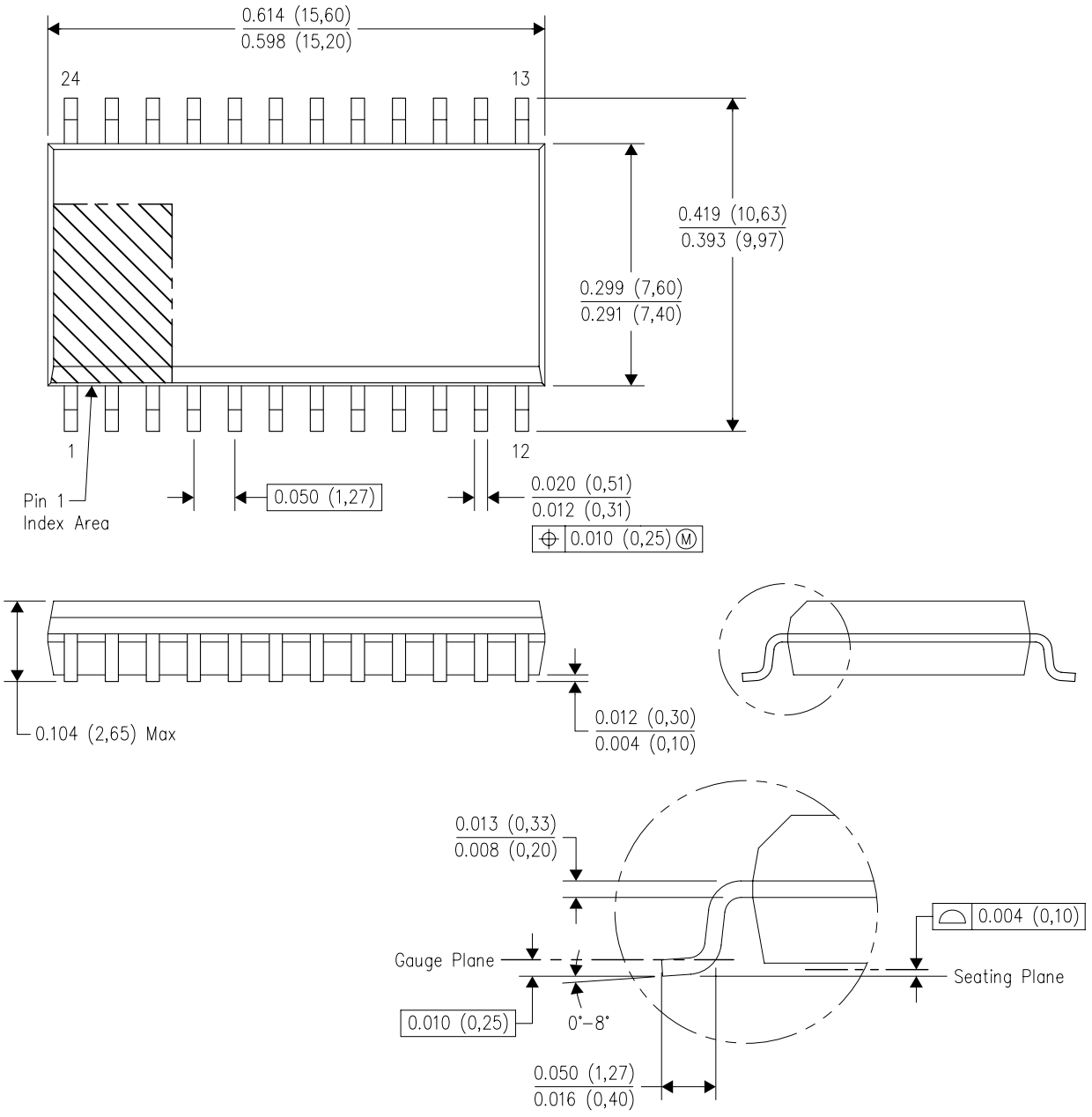

NOTES:
A. All linear dimensions are in inches (millimeters). Dimensioning and tolerancing per ASME Y14.5M–1994.
B. This drawing is subject to change without notice.
C. Body dimensions do not include mold flash or protrusion not to exceed 0.006 (0,15).
D. Falls within JEDEC MS–013 variation AD.

PW (R–PDSO–G24) PLASTIC SMALL OUTLINE

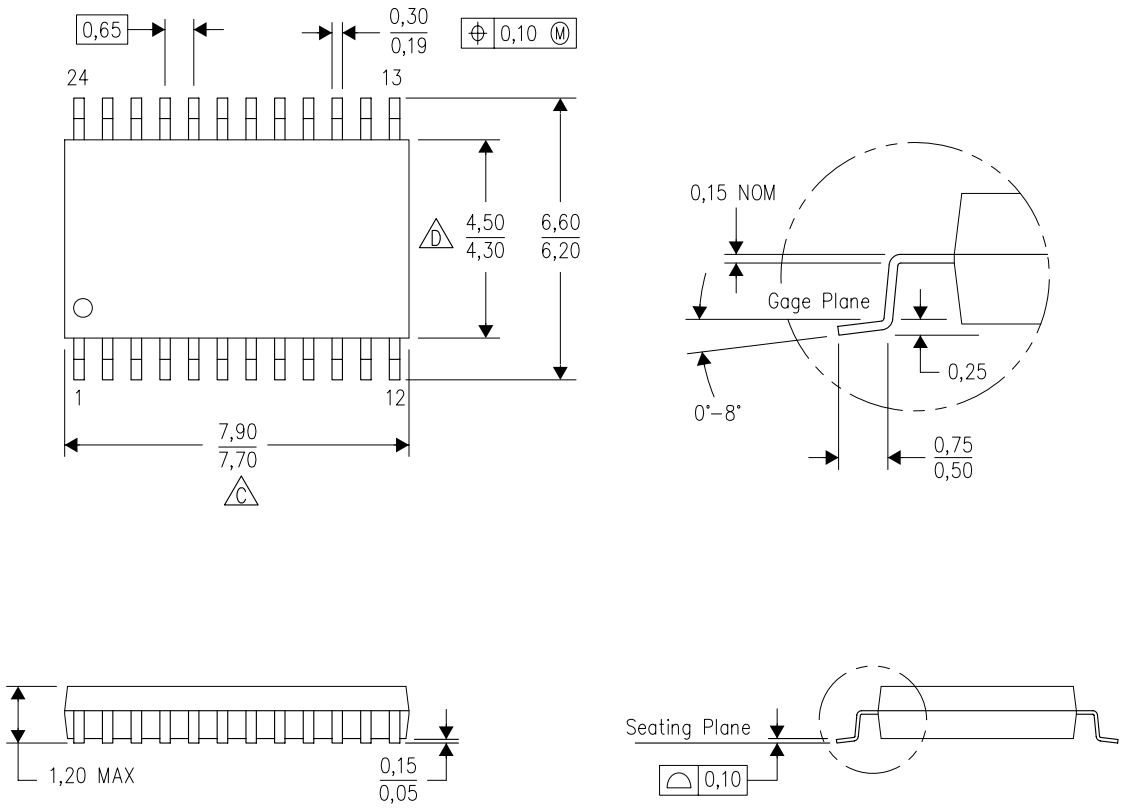

4040064–6/G 02/11

NOTES:
A. All linear dimensions are in millimeters. Dimensioning and tolerancing per ASME Y14.5M–1994.
B. This drawing is subject to change without notice.
C. Body length does not include mold flash, protrusions, or gate burrs. Mold flash, protrusions, or gate burrs shall not exceed 0,15 each side.
D. Body width does not include interlead flash. Interlead flash shall not exceed 0,25 each side.
E. Falls within JEDEC MO–153

PW (R–PDSO–G24) PLASTIC SMALL OUTLINE

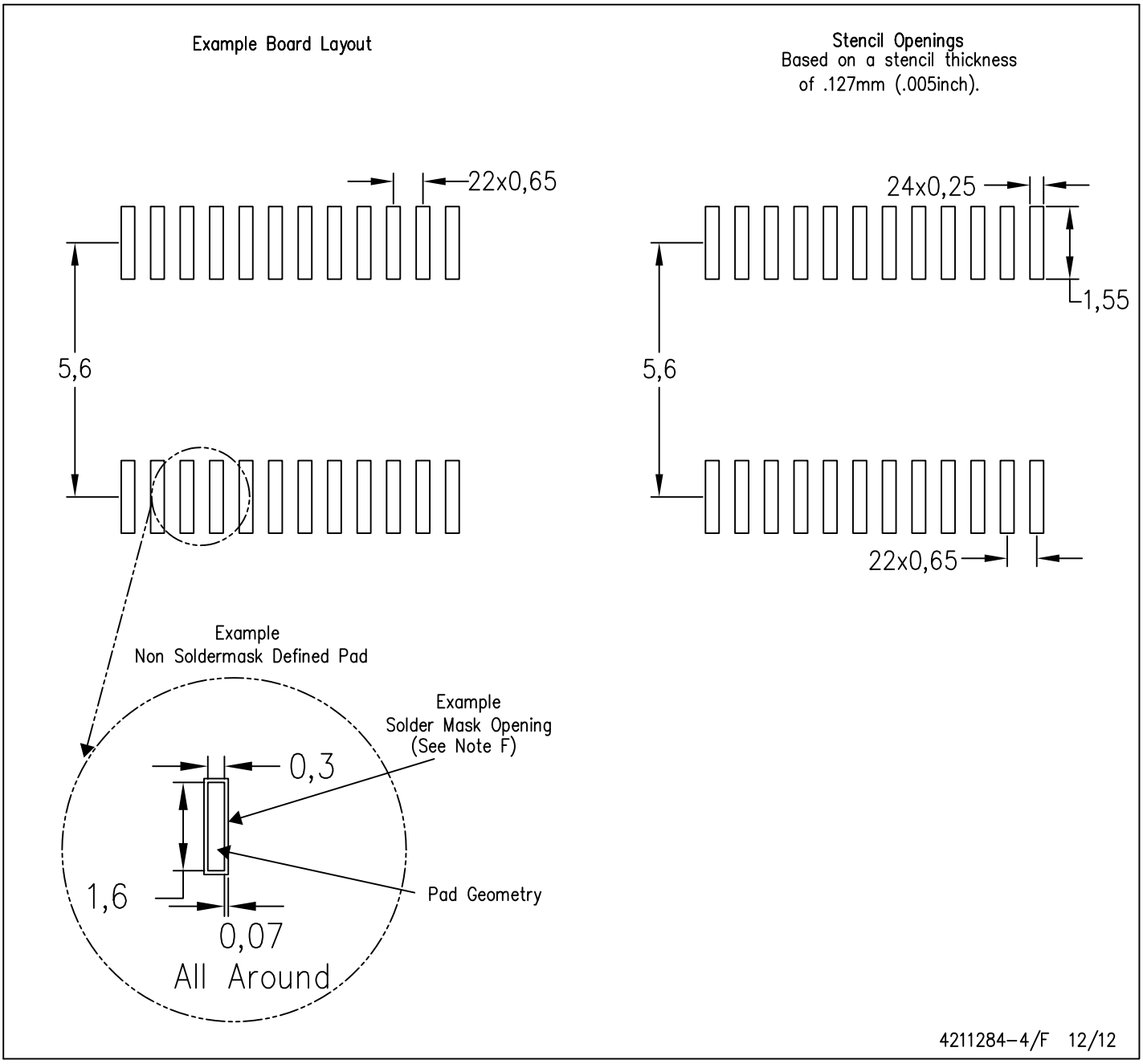

NOTES:
A. All linear dimensions are in millimeters.
B. This drawing is subject to change without notice.
C. Publication IPC–7351 is recommended for alternate design.
D. Laser cutting apertures with trapezoidal walls and also rounding corners will offer better paste release. Customers should contact their board assembly site for stencil design recommendations. Refer to IPC–7525 for other stencil recommendations.
E. Customers should contact their board fabrication site for solder mask tolerances between and around signal pads.

MSSO002E – JANUARY 1995 – REVISED DECEMBER 2001

DB (R-PDSO-G)** **PLASTIC SMALL-OUTLINE**

28 PINS SHOWN

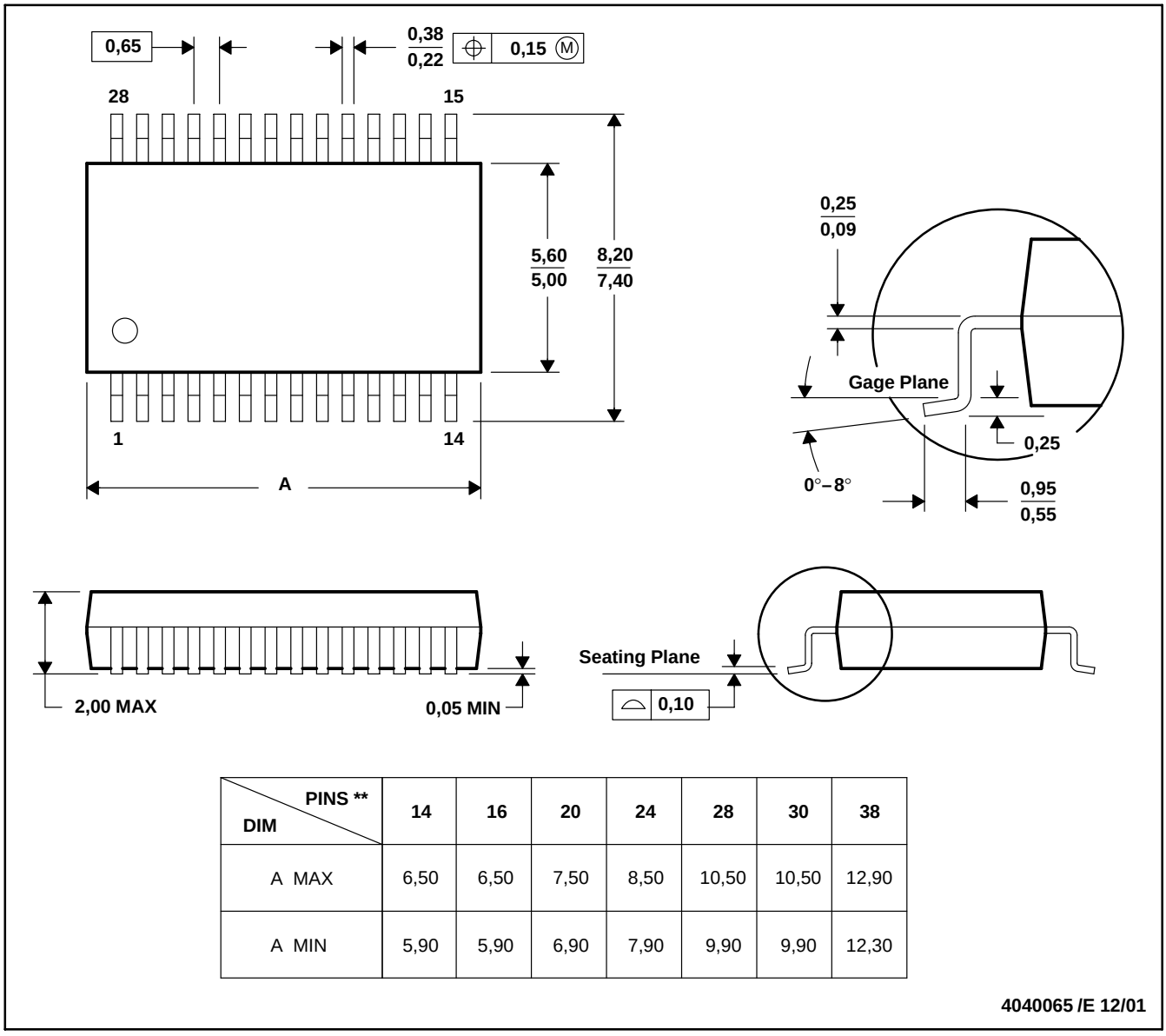

DIM \ PINS **	14	16	20	24	28	30	38
A MAX	6,50	6,50	7,50	8,50	10,50	10,50	12,90
A MIN	5,90	5,90	6,90	7,90	9,90	9,90	12,30

4040065 /E 12/01

NOTES: A. All linear dimensions are in millimeters.
B. This drawing is subject to change without notice.
C. Body dimensions do not include mold flash or protrusion not to exceed 0,15.
D. Falls within JEDEC MO-150

IMPORTANT NOTICE

Texas Instruments Incorporated and its subsidiaries (TI) reserve the right to make corrections, enhancements, improvements and other changes to its semiconductor products and services per JESD46, latest issue, and to discontinue any product or service per JESD48, latest issue. Buyers should obtain the latest relevant information before placing orders and should verify that such information is current and complete. All semiconductor products (also referred to herein as “components”) are sold subject to TI’s terms and conditions of sale supplied at the time of order acknowledgment.

TI warrants performance of its components to the specifications applicable at the time of sale, in accordance with the warranty in TI’s terms and conditions of sale of semiconductor products. Testing and other quality control techniques are used to the extent TI deems necessary to support this warranty. Except where mandated by applicable law, testing of all parameters of each component is not necessarily performed.

TI assumes no liability for applications assistance or the design of Buyers’ products. Buyers are responsible for their products and applications using TI components. To minimize the risks associated with Buyers’ products and applications, Buyers should provide adequate design and operating safeguards.

TI does not warrant or represent that any license, either express or implied, is granted under any patent right, copyright, mask work right, or other intellectual property right relating to any combination, machine, or process in which TI components or services are used. Information published by TI regarding third-party products or services does not constitute a license to use such products or services or a warranty or endorsement thereof. Use of such information may require a license from a third party under the patents or other intellectual property of the third party, or a license from TI under the patents or other intellectual property of TI.

Reproduction of significant portions of TI information in TI data books or data sheets is permissible only if reproduction is without alteration and is accompanied by all associated warranties, conditions, limitations, and notices. TI is not responsible or liable for such altered documentation. Information of third parties may be subject to additional restrictions.

Resale of TI components or services with statements different from or beyond the parameters stated by TI for that component or service voids all express and any implied warranties for the associated TI component or service and is an unfair and deceptive business practice. TI is not responsible or liable for any such statements.

Buyer acknowledges and agrees that it is solely responsible for compliance with all legal, regulatory and safety-related requirements concerning its products, and any use of TI components in its applications, notwithstanding any applications-related information or support that may be provided by TI. Buyer represents and agrees that it has all the necessary expertise to create and implement safeguards which anticipate dangerous consequences of failures, monitor failures and their consequences, lessen the likelihood of failures that might cause harm and take appropriate remedial actions. Buyer will fully indemnify TI and its representatives against any damages arising out of the use of any TI components in safety-critical applications.

In some cases, TI components may be promoted specifically to facilitate safety-related applications. With such components, TI’s goal is to help enable customers to design and create their own end-product solutions that meet applicable functional safety standards and requirements. Nonetheless, such components are subject to these terms.

No TI components are authorized for use in FDA Class III (or similar life-critical medical equipment) unless authorized officers of the parties have executed a special agreement specifically governing such use.

Only those TI components which TI has specifically designated as military grade or “enhanced plastic” are designed and intended for use in military/aerospace applications or environments. Buyer acknowledges and agrees that any military or aerospace use of TI components which have ***not*** been so designated is solely at the Buyer's risk, and that Buyer is solely responsible for compliance with all legal and regulatory requirements in connection with such use.

TI has specifically designated certain components as meeting ISO/TS16949 requirements, mainly for automotive use. In any case of use of non-designated products, TI will not be responsible for any failure to meet ISO/TS16949.

Products		**Applications**	
Audio	www.ti.com/audio	Automotive and Transportation	www.ti.com/automotive
Amplifiers	amplifier.ti.com	Communications and Telecom	www.ti.com/communications
Data Converters	dataconverter.ti.com	Computers and Peripherals	www.ti.com/computers
DLP® Products	www.dlp.com	Consumer Electronics	www.ti.com/consumer-apps
DSP	dsp.ti.com	Energy and Lighting	www.ti.com/energy
Clocks and Timers	www.ti.com/clocks	Industrial	www.ti.com/industrial
Interface	interface.ti.com	Medical	www.ti.com/medical
Logic	logic.ti.com	Security	www.ti.com/security
Power Mgmt	power.ti.com	Space, Avionics and Defense	www.ti.com/space-avionics-defense
Microcontrollers	microcontroller.ti.com	Video and Imaging	www.ti.com/video
RFID	www.ti-rfid.com		
OMAP Applications Processors	www.ti.com/omap	**TI E2E Community**	e2e.ti.com
Wireless Connectivity	www.ti.com/wirelessconnectivity		

Mailing Address: Texas Instruments, Post Office Box 655303, Dallas, Texas 75265
Copyright © 2014, Texas Instruments Incorporated